TABLE OF CONTENTS

Semi Automatic Filling Machine 2
Semi-auto Tabletop Gear Pump Filling Machine FG1100 (Servo Model) 2
Energy Saving Ration Liquid Filling Machine 9
Big Volume Tabletop Piston Pump Liquid Filling Machine 11
Tabletop Piston Pump Liquid Filling Machine 13
Tabletop Piston Filling Machine 15
Tabletop Overflow Filler 17
Advanced Tabletop Gear Pump Liquid Filler 19
Tabletop Gear Pump Liquid Filling Machine (tabletop filling machine) 22
Semi-Automatic Piston Pump Filling Machine 24
Two-nozzle bottle filler 28
Tabletop Peristaltic Pump Liquid Filling Machine 30
Compact Filling Line (Filler/Capper/Labeler) 34
Automatic Small Bottles Filling Capping Labeling Line (Including Cap Placing Machine) 36

SEMI AUTOMATIC FILLING MACHINE



SEMI-AUTO TABLETOP GEAR PUMP FILLING MACHINE FG1100 (SERVO MODEL)

SKU: FG1100

Semi-auto Tabletop Gear Pump Filling Machine FG1100 is a user-friendly HMI liquid filling machine with a servo motor. It is an advanced and efficient small filling equipment, combining high accuracy and high stability, and designed for liquid dispensing, and representing the highest level of professional small filling machines. The filler is equipped with precise gear pump technology and an AC servo motor, offering unparalleled filling accuracy and an excellent filling speed range.

The most outstanding feature of FG1100 is its high accuracy, with filling speed as high as 250 ml per second. It is applied to low viscosity liquids to improve production efficiency greatly, and is suitable for filling temperatures below 40°C. Many types of liquids can be smoothly filled into containers, meeting the various filling needs of different industries and ensuring the product quality.

If you want a filling machine that is simple to operate, precise, and efficient, our Semi-auto Tabletop Gear Pump Filler (FG1100) is your best choice, a professional small filler specially made for accurate and rapid filling. FG1100 has the following features:

Features:

- **7 Inch Touchscreen Interface; Visualization Operation:** Tap the touchscreen to quickly set and adjust the parameters, such as filling volume, speed, and time. Besides that, it can display the filling status and data, improving the convenience and visualization of the operation.
- **Precise Gear Pump:** There is no need to worry about liquid wastage and leakage; it accurately controls the filling volume and speed to achieve high quality and high efficiency.
- **AC Servo Motor:** The filling speed and volume can be adjusted precisely to meet different filling needs and conditions, which is the reason that FG1100 can provide higher filling accuracy and range.
- **More Elastic Production Configuration:** Free restriction from location and space. You can easily carry the filler and move

around to different places when needed. It provides more flexible production arrangements to laboratories, medium, and small factories with limited spaces.

Besides the above features, FG1100 has another advantage, which its cleaning steps are simple and quick. Cleaning the filler is an important step in liquid dispensing. If you don't clean the machine carefully, there will be a risk of bacterial breeding or mixed ingredients. FG1100 saves your cleaning time. Just follow the 3 steps below to complete the cleaning process smoothly:

- **Prepare a barrel of clean water and remove residual raw materials inside the pipe with the" Speed Filling" function on FG1100.**
- **Remove the liquid contact parts and clean them thoroughly. They are the pump, filling nozzle, and pipes. Please dry the pump completely after cleaning.**
- **If you have different liquids that need to be filled, it is recommended to purchase multiple sets of filling pipes for replacement. This way can avoid the mixing of different products and shorten the downtime of changing products in production.**

FG1100 is a high-precision and high-stability filling machine with a user-friendly HMI. It's the best choice among small fillers that meet precise filling volume and high productivity. The filler is designed and manufactured with a GMP certification standard and meets diverse filling needs of various industries such as food factories, pharmaceutical factories, and chemical plants. Meanwhile, it's also a powerful tool for small-volume, diverse filling and packaging production.

If you want to learn more about FG1100, please contact us, and we will provide you with professional and considerate services.



Advantages:

- **Fast filling speed and versatility: The semi-auto Tabletop Gear Pump Filling Machine**'s fill range is 5~4000ml. The filler can be used for filling and dispensing liquids with high fluidity, low temperature, and low viscosity.
- **Best choice of high accuracy:** Filling accuracy is ±0.5% (depends on the viscosity of liquids)
- **Adjustable speed control: Semi-auto Tabletop Gear Pump Filling Machine's a**djustable speed control can adapt to the needs of different products and containers to improve production flexibility.
- **Visualize Data: Semi-auto Tabletop Gear Pump Filling Machine** provides you with current data during production. The operator is able to get the production process clearly and handle problems in time.

Application & Advantage

Suitable Goods:

Food & Beverages: water, juice (with no pulp), tea, alcoholic beverages, olive oil, sesame oil, canola oil, soy sauce, pulp-free sauces, ketchup, liquid seasonings, etc.
Pharmaceuticals & biotechnology products: Liquid medicines, syrups, injections, biologics, pet injections, nutritional supplement drinks.
Cosmetics & Personal care: Facial mask, lotion, toner, serum, hand wash, shower gel, shampoo, conditioner, mouthwash, and perfume.
Chemicals and agricultural products: Detergent, dishwashing, car shampoo, engine oil, buffer solution, water-based paint, coatings, degreasers, automotive lubricants, alcohol, pet shampoo, laundry detergent, liquid fertilizers, pesticides, organic fertilizers, Brake fluid, coolant.
Vape: FG1100 can be used to fill a vape.



Suitable industry:

Pharmaceutical industry, food industry, biotechnology industry, cosmetics industry, chemical industry, electronics industry, packaging

industry, academic institutes or laboratories, etc.

Suitable container:

Various sizes and materials: plastic bottles, PET bottles, glass bottles, ampoules, metal bottles and jars, pottery, and bagged products (combine with packaging machines as required).



Suitable liquid:

Various liquids with good liquidity and below 40℃

Suitable Container Shape:

Round bottle, square bottle, jar, glass bottle, flat bottle, conical flask, and bottles with a special shape.



Filling Style:

Operation of the Semi-auto Tabletop Gear Pump Filling Machine is simple; please follow the steps below:

- Connect the filling nozzle to the outfeed side of the pump, and put

the nozzle into the bottle.

- Connect the power cable to the Semi-auto Tabletop Gear Pump Filling Machine and turn on the machine. Choose the mode that you're going to use, such as manual mode or automatic mode.
- Set the parameters on the HMI, such as filling volume, filling speed, and filling time. And save the parameters or select saved parameters.
- Press the Start button and start to fill. You can check the filling status and data through HMI at any time.
- After completing the filling, press E.M Stop and turn off the machine. Disassemble the filling component and filling pipe for cleaning.

Semi-auto Tabletop Gear Pump Filling Machine is easy to operate with high accuracy. It saves time and cost, as well as enhances product quality and competitiveness.

Machine Layout:

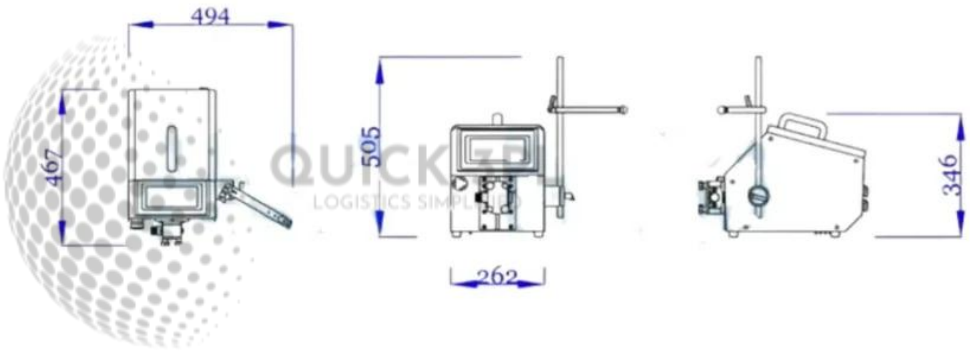

Features

1. High-quality HMI: 7 7-inch colored touchscreen provides visualization and convenience while operating. You can take control of the production situation and the data which displayed on the screen at any time.
2. Semi-auto Tabletop Gear Pump Filling Machine is equipped with an AC servo motor and a PLC control system, providing high-precision and highly stable filling operations for various industries.
3. Allowing to save 100 recipes: One-click saving: You can save production data, including product name, filling volume, speed, and other information, etc., accelerating production conversion.
4. Fast filling speed & wide filling range: Semi-auto Tabletop Gear Pump Filling Machine is suitable for quick dispensing large volume products.
5. Strong suction power, you can directly place the filling pipe into the material barrel to extract liquid.
6. Semi-auto Tabletop Gear Pump Filling Machine uses a touch screen interface to input the filling volume and set the speed directly to ensure the correctness of the parameters.

7. There are 3 operation modes: manual, automatic, and test mode.
8. The advantage of FG1100 lies in its high accuracy, which can ensure that each product reaches the precise capacity. It is very important for various industries such as food factories, pharmaceutical factories, chemical plants, laboratories, etc.
9. The gear pump is driven by a servo motor, so you can precisely adjust the filling volume and its speed.
10. The 2nd speed filling mode prevents liquid splash and reduces foaming when the liquid level is close to the bottle mouth.
11. Ball-valve shut-off nozzle prevents liquid dripping and also follows the safety standard.
12. Shorten cleaning & maintenance time, liquid only passes through the pump and filling pipe, but not the machine.
13. Freestanding filling pump for quick removal and cleaning
14. Semi-auto Tabletop Gear Pump Filling Machine has a highly stable PLC that can avoid environmental disturbance.
15. Customization possibility, you can choose different pumps to match different liquids.
16. Semi-auto Tabletop Gear Pump Filling Machine is designed and manufactured according to the GMP standard, and meets the needs of the food and pharmaceutical industries.
17. The machine shell is made of glossy stainless steel, beautiful and easy to clean.
18. The handle is on the top of the machine, easy to relocate for different production needs.
19. The touch screen interface is available in multiple languages.
20. Semi-auto Tabletop Gear Pump Filling Machine is equipped with the E.M Stop button, which makes the operation safer.
21. The servo motor precisely controls the gear pump system for a consistent filling volume.
22. The sloping machine shell is not easy to accumulate water and dust.

Specification

- **Automation Level**： Semi-auto
- **Filling Type**： Gear Pump
- **Filling Range**：5~4000ml
- **Filling Speed**: 50- 250ml (depends on the viscosity of liquids)
- **Filling Accuracy**：±0.5~1% (with 100ml and more; depends on the type of liquids)
- **Applicable Liquid**： liquid with good liquidity and below 40°C
- **Power Supply**：110 or 220VAC, 50/60Hz, single phase
- **Machine Size**：(L)470mm (W)490mm (H)505mm
- *** Actual product specifications may vary**

Option Accessories

- Stainless Steel Hopper
- Electronic Scale & Weight Filling Mode

- Pneumatic Shut-off Nozzle prevents liquid dripping
- Diving nozzle to reduce foaming
- Integrate with other automated equipment

Categories: Filling Machine, Semi Automatic Filling Machine



ENERGY SAVING RATION LIQUID FILLING MACHINE

SKU: FP2000

1. Energy Saving Ration Liquid Filling Machine is suitable for medium viscosity liquid (such as lotion, oil, and sauce) and liquid under 60 degrees centigrade.
2. Filling stable with high accuracy.
3. Energy Saving Ration Liquid Filling Machine has a compact design, easy to operate.
4. Energy Saving Ration Liquid Filling Machine is pneumatic driven, making it operate more safely and economically.
5. We offer a Piston Filling Machine for the packing of filling products for any kind of liquid. Easy to operate, energy efficient, and cost-effective.

Features

1. Energy Saving Ration Liquid Filling Machine is easy to clean without disassembling the whole machine.
2. Energy Saving Ration Liquid Filling Machine's filling volume can be adjusted by hand wheel easily.
3. Filling material can be replenished directly from a bottle or by a filling tube.
4. Energy Saving Ration Liquid Filling Machine has an advanced valve in the nozzle that prevents liquid from dripping down.
5. Energy Saving Ration Liquid Filling Machine has a protective shield and medical-level silicon tube for qualification to a high standard of hygiene.
6. Energy Saving Ration Liquid Filling Machine is equipped with a movable stand to break space limitations and increase mobility.
7. Energy Saving Ration Liquid Filling Machine is made of SUS#304 stainless steel and aluminum alloy for easy maintenance and longevity to meet cGMP standards.
8. Our control system provides long-term energy-saving results.

Specification

- **Filling Cylinder**：200c.c./ 500c.c./ 1000c.c.
- **Filling range**：5-200ml/ 50-500ml / 100-1000ml
- **Filling speed**：50-150ml/sec
- **Filling accuracy**：±0.5%
- **Air pressure requirement**：6 kgf/cm2

Option Accessories

- Heating source tank
- Pneumatic shut-off nozzle
- Photocell switch

Categories: Semi Automatic Filling Machine, Filling Machine

BIG VOLUME TABLETOP PISTON PUMP LIQUID FILLING MACHINE



SKU: FP1010

Big volume tabletop piston pump liquid filling machine FP1010 is designed for slightly thick materials like normal saline, juice, oil, eye drops, body lotion, julep, makeup remover, essential oil, skin moisturizer, UP protective fluid, sun block, mouthwash, bathroom cleanser, functional drink, alcoholic product, chemicals and organic fertilizer etc.

Features

1. Semi-automatic filler, ease of operation.
2. Big Volume Tabletop Piston Pump Liquid Filling Machine can fill consecutively or fill with an interval time.
3. Big Volume Tabletop Piston Pump Liquid Filling Machine's filling volume, filling speed, and suction speed can be adjusted by hand wheel easily.
4. Big Volume Tabletop Piston Pump Liquid Filling Machine is activated by a foot pedal (option).
5. Big Volume Tabletop Piston Pump Liquid Filling Machine has a ball-valve shut-off nozzle that prevents liquid from dripping down.
6. Big Volume Tabletop Piston Pump Liquid Filling Machine is known for easy disassembly and cleaning.
7. Big Volume Tabletop Piston Pump Liquid Filling Machine is corrosion-resistant material for the chemical industry and cleansing products.
8. Big Volume Tabletop Piston Pump Liquid Filling Machine is made of stainless steel and, suits for a humid environment.
9. Big Volume Tabletop Piston Pump Liquid Filling Machine has a compact design to save more room
10. Big Volume Tabletop Piston Pump Liquid Filling Machine is equipped with an emergency stop button for safety concerns.

Specification

- **Filling volume**: 100~1000ml
- **Filling speed**: 30~150 ml/sec (depends on the different viscosities of the liquid)
- **Filling accuracy**: ± 0.5%
- **Air pressure requirement**: 6 kgf/cm2
- **Dimension**:(L)1200mm (W)300mm (H)315mm

Option Accessories

- Heating source tank
- Pneumatic shut-off nozzle
- Photocell switch

Categories: Filling Machine, Semi Automatic Filling Machine



TABLETOP PISTON PUMP LIQUID FILLING MACHINE

SKU: FP1005

Tabletop Piston Pump Liquid Filling Machine is available for products like cleanser, dishwashing liquid, cream, honey, hair conditioner, body lotion, pastes, alcoholic products, syrup, slightly thick sauce, oil, and chemicals, etc.

Features

1. Semi-automatic filler, ease of operation.
2. Tabletop Piston Pump Liquid Filling Machine is suitable for warm liquid (under 60 degrees) and viscous liquid, such as oil, lotion, shampoo, syrup, and alcoholic liquid.
3. Tabletop Piston Pump Liquid Filling Machine can fill consecutively or fill with an interval time.
4. Tabletop Piston Pump Liquid Filling Machine's filling height can be adjusted by hand wheel for different bottles.
5. Tabletop Piston Pump Liquid Filling Machine's filling volume, filling speed, and suction speed can be adjusted by hand wheel easily.
6. Tabletop Piston Pump Liquid Filling Machine is activated by a foot pedal (option).
7. Tabletop Piston Pump Liquid Filling Machine has a ball-valve shut-off nozzle that prevents liquid from dripping down.
8. Tabletop Piston Pump Liquid Filling Machine is known for easy disassembly and cleaning.
9. Tabletop Piston Pump Liquid Filling Machine is corrosion-resistant material for the chemical industry and cleansing products.
10. Tabletop Piston Pump Liquid Filling Machine is made of stainless steel and is suitable for a humid environment.
11. Compact design to save more room.
12. Tabletop Piston Pump Liquid Filling Machine is equipped with an emergency stop button for safety concerns.

Specification

- **Filling volume**: 50~500ml
- **Filling speed**: 30~150 ml/sec (depends on the different viscosities of the liquid)
- **Filling accuracy**: ± 0.5%
- **Air pressure requirement**: 6 kgf/cm2
- **Dimension**: (L)1100mm (W)290mm (H)310mm

Option Accessories

- Heating source tank
- Pneumatic shut-off nozzle
- Photocell switch

Categories: Semi Automatic Filling Machine, Filling Machine



TABLETOP PISTON FILLING MACHINE

SKU: FP1002

Tabletop piston filling machine FP1002 is suitable for small filling volume requirements. The cylinder filling module ensures precise filling volume and prevents liquid from dripping down. Besides, filling volume, filling speed, and suction speed can be adjusted by hand wheel easily. No electricity is needed, especially for alcoholic liquids.

Features

1. Tabletop piston filling machine, ease of operation.
2. The tabletop piston filling machine is suitable for warm liquid (under 60 degrees) and viscous liquid, such as oil, lotion, shampoo, syrup, and alcoholic liquid.
3. The tabletop piston filling machine can fill consecutively or fill with an interval time.
4. The tabletop piston filling machine's filling height can be adjusted by hand wheel for different bottles.
5. Tabletop piston filling machine's filling volume, filling speed, and suction speed can be adjusted by hand wheel easily.
6. The tabletop piston filling machine is activated by a foot pedal (option).
7. The tabletop piston filling machine has a ball-valve shut-off nozzle that prevents liquid from dripping down.
8. The tabletop piston filling machine is known for easy disassembly and cleaning.
9. The tabletop piston filling machine is corrosion-resistant material for the chemical industry and cleansing products.
10. Tabletop piston filling machine made of stainless steel and suitable for a humid environment.
11. Tabletop piston filling machine has a compact design to save more room
12. The tabletop piston filling machine is equipped with an emergency stop button for safety concerns.

Specification

- **Filling volume**: 5~200ml
- **Filling speed**: 30~150 ml/sec (depends on the different viscosities of the liquid)
- **Filling accuracy**: ± 0.5%
- **Air pressure requirement**: 6 kgf/ cm2
- **Dimension**: (L)1000mm (W)295mm (H)300mm

Option Accessories

- Customized cylindraceous reservoir
- Heating source tank
- Pneumatic shut-off nozzle
- Photocell switch
- Dipping nozzle

Categories: Semi Automatic Filling Machine, Filling Machine



TABLETOP OVERFLOW FILLER

SKU: FL1100

Tabletop overflow filler is best suited for liquids with low to medium viscosity. The desired product to be filled is held in a stainless steel reservoir, then pumped into a manifold to disperse the product to each of your filling nozzles. When the container fills up to the target fill height, the excess product and foam are forced out of the container via the return side to the original product source tank. The unique overflow filling nozzles allow for each bottle or container to be filled to the same level, allowing for an aesthetically pleasing shelf appeal for clear containers.

Tabletop overflow filler is suitable for free-flowing liquids such as water, juice, syrups, alcoholic beverages, shampoos, foamy cleansers and chemicals, and other non-carbonated aqueous beverages. It is especially suited for foamy liquids. High performance, easy to clean, easy to operate, expandable at low cost. Offers the greatest flexibility at the lowest cost.

Tabletop Overflow Filler is manufactured with a heavy-duty 304 stainless steel, tig-welded frame and is available with 2 filler heads. Stainless steel Filling Heads, and Product Supply Pump, plus many more features.

Features

1. Compact design, easy to operate, space-saving, and high mobility.
2. Duel nozzles, efficient filling.
3. Filling volume is adjustable, diversifying the production line.
4. Diving nozzles prevent foam from forming and spillage.
5. Fill level consistency, an idea of transparent glass bottles filling.
6. Tabletop Overflow Filler is suitable for liquids with good liquidity.
7. Heavy-duty construction for longevity.
8. Overflow liquid back to the tank, avoid waste.
9. The bottle height and bottle positioning adjuster make it easy to change bottles.
10. Tabletop Overflow Filler is easy to clean without disassembling the whole machine.
11. Filling speed and volume are adjustable to meet a variety of production.
12. SUS#304 stainless steel and aluminum alloy frame construction.
13. One-way valve to keep heads full of product between filling cycles.

Specification

- **Filling range**: 5-5000 ml

- **Filling speed**: 50-250 ml/sec
- **Filling accuracy**: ±0.5 %
- **Power supply**: 110/200 VAC, single phase

Option Accessories

- capping machine
- date coding machine

Categories: Semi Automatic Filling Machine, Filling Machine



ADVANCED TABLETOP GEAR PUMP LIQUID FILLER

SKU: FG1050

Tabletop Gear Pump Liquid Filler is a versatile filling machine, and there is no need to buy any additional hopper. Because of the compact design of the tabletop liquid filling machine, it's incredibly suitable for limited space, and can be used in a small place.

The suitable filling range is from 50 ml to 4000ml, and can be applied to flowable liquid no hotter than 50 degrees Celsius, such as tea, beverage, juice, essential oil, water, oral solution, potion, edible oil, dish washer and the products from many kinds of industry, such as food, bio-pharma, cosmetic, and chemical.

Advanced Tabletop Gear Pump Liquid Filler is a small-scale filling machine that is suitable for various kinds of filling volumes and different kinds of liquid products. The Tabletop Gear Pump Liquid Filler is equipped with an advanced touch screen human-machine interface that not only allows the operator to adjust the filling volume, filling speed, and filling time, but also makes the filling machine more productive because there is no need to do mechanical adjustments.

Gear Pump Liquid Filler Machine That Is Suitable For Many Kinds Of Small-To-Medium Scale Filling Production

Advanced Tabletop Gear Pump Liquid Filler can be operated by a single operator, and there is no need to purchase another hopper. All the operator needs to do is put the in-feed tube into the source tank, and the filling machine will draw the liquid itself, which could save the wasted time on refilling the hopper. There will be no contact between the tabletop filling machine and the liquid, so the cleaning and maintenance are easy and time-saving.

The compact semi-automatic filling machine has many kinds of filling tubes that could be chosen according to your liquid's properties. With the food/ pharma grade filling tube, the sanitary requirement can be fulfilled without a doubt. Also, the economic tabletop filling machine has a connection that could be integrated into a capper/ labeling machine, becoming a compact filling-capping-labeling production line according to your needs.

Features

1. The Tabletop Gear Pump Liquid Filler could be operated by a single operator, and it provides a high-efficiency/high-accuracy filling process.
2. The gear pump with high filling accuracy.

3. An optional high-temperature resistant, plasticizer-free filling tube suitable for high-temperature liquid filling.
4. The shut-off ball valve would prevent the liquid from dripping and keep the product clean and beautiful.
5. Tabletop Gear Pump Liquid Filler has a PLC-controlled system providing a simple operating interface.
6. With digital parameter input/ setting, there is no need to make physical adjustments.
7. Two kinds of filling mode: filling from the source tank or the optional hopper.
8. There will be no contact between the filling machine and the liquid, so the cleaning and maintenance are easy and time-saving.
9. Tabletop Gear Pump Liquid Filler has a stainless steel base frame that meets the cGMP standard.
10. The filling control system is stable and endurable.
11. The filling operating mode could be switched depending on your need: manual/ automatic/ foot pedal.
12. The Tabletop Gear Pump Liquid Filler could be easily rearranged to another place, which provides high mobility and high convenience.
13. Tabletop Gear Pump Liquid Filler can be applied to flowable, under 50 degrees Celsius liquid, such as juice, potion, shampoo, and motor oil.
14. Wide-range application, making the filling machine more economical.
15. Tabletop Gear Pump Liquid Filler shortens the filling time and manpower requirement.
16. The instrument meets the cGMP requirements and is suitable for chemical, pharmaceutical, food, cosmetic, and biotech industries.

Specification

- **Product type**： Tabletop liquid filling machine
- **Model**： FG1050
- **Industries**： Beverage, pharma, chemical, biotech, cosmetic
- **Package**： Bottle, pouch, Pouches in various shapes and sizes
- **Packaging material**： Glass, plastic, aluminum, iron can.
- **Filling range**：50-4000 ml
- **Filling speed:** 50- 250 ml/sec
- **Filling accuracy**：0.5- 1%
- **Machine weight:** 17 kg.
- **Power supply**：110V/220V, 50/60 Hz, single phase
- **Dimension**：(L) 480mm (W) 310mm (H) 270mm
- **Manufacture in**： Taiwan
- **MOQ 1**：set
- **Customization**： According to the liquid property
- **Warranty**： One year

Option Accessories

- 3.5 L stainless steel hopper (customizable)
- 10-30 L hopper, 6 mm/ 8 mm filling diameter.
- Automatically pneumatic shut-off valve.
- Diving filling nozzle
- Foot penal
- Photoelectric switches
- Easy assembling connector

Categories: Semi Automatic Filling Machine, Filling Machine



TABLETOP GEAR PUMP LIQUID FILLING MACHINE (TABLETOP FILLING MACHINE)

SKU: FG1000

Tabletop gear pump liquid filling machine is equipped with an accurate gear pump, which could provide a high-speed filling mode. The tabletop gear pump liquid filling machine is designed for limited production space. The compact machine design does not need too much room, and with its simple installation and easy operating mode, the required time for production is shortened.

What makes this filling machine more efficient is that it could be easily applied to many kinds of liquids in different filling volumes if the liquid is flowable and is not higher than 50 degrees Celsius, such as lotion, toner, cleansing oil, lotion, shampoo, olive oil, detergent, etc. The filling tube is made of food/ pharmaceutical grade materials, which can be put into the hopper you already have, and no need to buy another one.

How To Use A Single Tabletop Gear Pump Liquid Filling Machine To Produce Different Products?

The operators can easily operate and adjust the Tabletop Gear Pump Liquid Filling Machine via the microcomputer digital dial button, and the filling volume, filling speed, and operating time are all adjustable. Just put the filling tube into your hopper and turn on the power, and the filling machine will start production. The only thing you need to do for a product changeover is to adjust the settings and begin batch production.

The Tabletop Gear Pump Liquid Filling Machine parts and your liquid won't have any contact, so the buyers don't need to worry about contamination. Also, this machine could be applied to more than one kind of liquid. All you need to do to handle these liquids is use the proper filling tube, which is easy to clean and replace, and a high-standard sanitary one. It's the best tabletop filling solution for small volume and small batch production.

Features

1. Tabletop Gear Pump Liquid Filling Machine is equipped with a liquid shut-off device, which prevents dripping and keeps the machine clean.
2. The tabletop gear pump filling machine provides high filling speed and high filling accuracy.
3. Tabletop Gear Pump Liquid Filling Machine has a microcomputer digital control panel makes the machine easy to set and simple to operate.

4. All filling speed, filling volume, and filling interval time are adjustable.
5. The food-grade filling tube could be placed into the tank directly, or we also have an optional hopper available.
6. CE-certified machine with more reliability.
7. Tabletop Gear Pump Liquid Filling Machine is constructed with stainless steel, which meets the cGMP requirement.
8. Food/ Pharmaceutical class filling tube, providing easy cleanness and quick product changeover.
9. Compact semi-automatic liquid filling machine for limited space.
10. Switchable filling mode available: manual/ automatic/ foot-panel.
11. Tabletop Gear Pump Liquid Filling Machine is suitable for flowable liquids, have low viscosity and low-to-medium temperatures.
12. The filling time could be set as interval filling or continuous filling.
13. The operator could control the production by using the foot panel.
14. Different kinds of filling tubes are available to meet the buyer's requirements.

Specification

- **Product type**： Semi-automatic liquid filling machine
- **Model**： FG1000
- **Industries**： Food, Chemical, Pharma, Biotech, Cosmetic
- **Power supply**：110V/220V, 50/60 Hz, single phase
- **Apply to**: Bottles/ Bags/ Pouches in various shapes and sizes
- **Packaging material**： Glass and plastic
- **Filling range**：50-4000 ml
- **Filling speed**: 50- 250 ml/sec
- **Filling accuracy**：0.5- 1%
- **Machine weight**: 17 kg.
- **Dimension**：(L) 480mm (W) 310mm (H) 270mm
- **Manufacture in**： Taiwan
- **MOQ 1**：set
- Customization: According to the liquid property
- **Warranty**: One year

Categories: Filling Machine, Semi Automatic Filling Machine



SEMI-AUTOMATIC PISTON PUMP FILLING MACHINE

SKU: FP2100

Semi-automatic piston pump filling machine is the common design of the piston filler. Neostarpack is extremely experienced in manufacturing tabletop filling machines, and we reduce the space requirement of the standalone piston pump filling machine by using the basic standalone machine module.

The whole machine only needs an A3 area, which is only the 1/3 of the tabletop filling machine, extremely suitable for the limited space. It's a convenient liquid filling instrument for small to medium-scale production. The piston pump liquid filling machine with the liquid quick release design, and its mechanical filling design makes it more accurate, also meets the requirements for filling different kinds of liquids.

Semi-Automatic Piston Pump Filling Machine can be applied to both bottled products and bagged products, and it could easily handle different kinds of bottle materials and bottle shapes. The piston pump filling machine is compatible with liquids from low to high viscosity in food, cosmetic, chemistry, and biotech industries, such as soy sauce, paste, sauce, oil, cosmetic products, beverages, shampoo, detergent, etc.

Semi-Automatic Piston Pump Filling Machine Advantage

1. Comply with cGMP, the pharmaceutical manufacturing specification. Use SUS316 or 316L corrosion-resistant stainless steel.
2. Comply with food manufacturing specifications, use sanitary protective cover, and a qualified sanitary filling tube.
3. The filling quality is excellent, and the filling liquid does not drip. Maintain the hygiene and product quality.
4. Semi-Automatic Piston Pump Filling Machine is the most suitable filling machine for small or medium production.

Application & Advantage

Semi-Automatic Piston Pump Filling Machine can increase the whole line's production efficiency

Semi-Automatic Piston Pump Filling Machine with its hopper settled right on the filling cylinder, which makes the filling process quick and accurate. The height of the hopper is designed properly to ensure it's in the best working area. Also, the piston pump filler itself is designed for comfortable working by allowing the operators could sit down when

production is going. The easy assembling cylinder design makes it easy to maintain and clean the machine. Unlike the common piston pump filling machine and its heavy, huge, and inconvenient body, Neostarpack semi-automatic piston pump filling machine, with its movable wheel, can increase the whole line production efficiency.

Piston pump filler suitable for:

Alcohol, oil, lotion, sauce, oral liquid, essential oil, edible oil, beverage, soy milk, motor oil, etc.

Package

PET bottle, glass bottles, aluminum can, metal can, aluminum bag, plastic bag, etc.





Semi-Automatic Piston Pump Filling Machine FP2100

This picture shows a 1000ml filling machine without a hopper, and there is also a 500ml type. It can be customized. Welcome to inquire.

Features

1. The filling volume of the piston pump filling machine is adjustable according to your product and requirements.
2. Sanitary grade pump provides an accurate filling procedure.
3. Independent, easy-assembling piston cylinder allows quick maintenance and changeover.
4. A foot switch is available, providing a controllable interval time.
5. Semi-Automatic Piston Pump Filling Machine with high space efficiency, suitable for limited space.
6. Semi-automatic filling machine ergonomics design made it possible to have high efficiency and a comfortable working environment at the same time.
7. Moveable base design with wheel, easy re-arrangement according to your production requirement.
8. Semi-Automatic Piston Pump Filling Machine is suitable for bottled products and bagged products.

9. Piston pump filler can be applied to high viscosity liquids (10000 cps)
10. Semi-Automatic Piston Pump Filling Machine is equipped with a hand wheel for easy volume adjustment, also easy to operate.
11. Mechanical filling design made it more accurate
12. Semi-Automatic Piston Pump Filling Machine is made of stainless steel, which meets the cGMP requirement.

Specification

- **Filling range**: 100- 1000ml
- **Filling speed**: 30-150 ml/sec (depends on the liquid viscosity)
- **Hopper**: 10-20 L available
- **Dimension**: (L) 350mm (W) 350mm (H) 1700mm
- **Power Supply**: 110/220V, single phase.
- **Filling Accuracy**: ±1%
- **Air supply**: 6 kgf/cm2
- **Weight**: 60kg

Option Accessories

- Customized Hopper (sanitary grade or stainless-steel hopper): extra volume
- Heating hopper (under 60 degrees).
- Automatic check valve
- Automatic shut-off value
- Anti-foaming filling nozzles
- Air compressor
- Photoelectric start switches

Categories: Filling Machine, Semi Automatic Filling Machine



TWO-NOZZLE BOTTLE FILLER

SKU: FG2100

Two-nozzle bottle filler

When one tabletop liquid filling machine is not enough to meet market needs, we always suggest that our customers buy one more from us to increase productivity. But when we visit our customers' factories, we often see that the operator can only use one filling machine at a time. What if we designed a new type of two-nozzle filling machine to solve this problem?

We care about the smoothness of producing progress, so we designed a 2-nozzle gear pump filling machine. It has a working table and is capable of holding two products at the same time. After you fill products on the right-hand side of this filling machine, you can do capping and labeling on the working table in the middle, and then you can pack them on the left-hand side.

We believe this double-nozzle bottle filling machine can give customers space for doing other things, like capping and labeling. If you want a label applicator, you may buy it and put it on the working table to help you do labeling. The platform for putting the carton on the left-hand side may come off if you don't need it. It's possible to become a complete semi-automatic production line with this machine if you buy a capping machine and a labeling machine from us. The operation of the double-nozzle bottle filling machine is simple. All you need to do is set up parameters, turn to semi-auto mode or automatic mode, then step on the foot pedal or press the start button.

Features

1. The two-nozzle design doubles the speed.
2. Gear pumps are positioned beneath a working table.
3. Achieve high speed and accuracy.
4. Its shut-off nozzle design prevents liquid dripping.
5. Make speed, volume, and interval time easily adjustable.
6. Multiple filling modes, test/manual/automatic, make it easy to maneuver.
7. Two-nozzle bottle filler comes with a convenient foot pedal.
8. Two-nozzle bottle filler's entire frame is made of SUS#304 that meets the cGMP standard.
9. Nozzles and all critical parts are made of SUS#316.
10. Two-nozzle bottle filler is equipped with an Emergency stop button to enhance safe handling.

Specification

- **Filling range**: 5-4000ml
- **Filling speed**: 50- 250ml/sec
- **Filling accuracy**: ±0.5%~1%
- (Subject to Liquid Type and Filling Speed)
- **Power supply**: 110 or 220VAC; single phase
- **Machine dimension**: (L)1550mm(W)400mm(H) 1300mm

Option Accessories

- Automatic pneumatic shut-off nozzle
- Customized stainless steel source hopper
- PLC & HMI control system

Categories: Semi Automatic Filling Machine, Filling Machine



TABLETOP PERISTALTIC PUMP LIQUID FILLING MACHINE

SKU: FT1000

Tabletop Peristaltic Pump Liquid Filling Machine FT1000 features precise, hygienic filling and is suitable for industries such as biotechnology, food, chemical, and medical, as it allows for filling with no chance of contamination. It's lightweight and portable, takes up little production space, and is perfect for those who are starting to move into automatic production, those who do not have a lot of extra production space, or those who would like a backup machine to support an existing production line.

The interface allows up to 20 recipes to be saved at once, for those who are constantly switching products, and also allows the operator to keep track of production levels. Only one operator is needed during production, which frees up valuable manpower to focus on other tasks.

The one-tube feature of this Tabletop Peristaltic Pump Liquid Filling Machine allows the user to switch between production lines without fear of cross-contamination. The liquid does not leave the tube at all during the filling process, saving time and energy that can be spent more productively.

For products that may need to be filled in a sterile environment or those that may have chemical reactions to the metal innards of a typical filling machine, this will reduce all sorts of unwanted exposures and possible hazards.

For products where isolation and sterilization are not high priorities, the Tabletop Peristaltic Pump Liquid Filling Machine can still help save cleaning time, as there is no need to clean the machine's main body. Only the tube needs to be cleaned, and a different tube can be assigned to each product, so that product switching can be done just by putting the assigned tube onto the machine.

So, for our consumers who need to switch between three or more products, or have high hygiene standards, we recommend the Tabletop Peristaltic Pump Liquid Filling Machine for your filling needs.

Advantages

1. Steady and precise filling by the peristaltic pump.
   2. Single tube means that there is no possibility of cross-contamination, as well as easy production switching.
   3. No additional parts or tools needed to change production.
   4. Meets the cGMP Guidelines for Good Manufacturing Practice for

Medicinal Products.
5. Can be used with a capper and labeler to create a semi-automatic production line.

Application & Advantage

Suitable for:

Syrups, sauces, oils, yogurts, juices, glues, chemicals, alcohols, creams, shampoos, detergents, pastes, serums, concentrates, extracts, nail polishes, pigments, varnishes, slurries, resins, inks, purees.

Suitable fields

Pharmaceuticals, biotechnology, dietary supplements, cosmetics, food and beverages, laboratories, and hospitals.



Q & A

Q: Can fillings with solid chunks be used with the Tabletop Peristaltic Pump Liquid Filling Machine?

A: It is not recommended. For solid/liquid mixes, we recommend taking a look at the FP line, which can fill those kinds of liquids.

Q: What's the difference between the FT1000 and FG1000?

A: Visually, they appear very similar to each other. The most crucial

difference is in the way they pump liquids. The FG1000 uses a gear pump, which means that the infeed and outfeed tubes are connected to the gear pump in the front. As the liquid passes through the gear pump, it is pushed towards the outfeed tube. The FT1000, on the other hand, features one unbroken tube that goes from infeed to outfeed. The peristaltic pump massages the tube to force the liquid to pump through. The FG1000 is can fill continuously, while the FT1000 fills in cycles and is suitable for products that need to be filled in a sterile environment.



FP1002



FG1000

Features

1. Tabletop Peristaltic Pump Liquid Filling Machine features a humanized digital control interface, adjustable filling volumes, speed, and intervals for easy adjustments
2. User-friendly PLC program, making operation fast and easy.
3. Semi-automatic operation means that the machine has no complicated parameter settings; it's easy to use even for first-time operators.
4. Tabletop Peristaltic Pump Liquid Filling Machine is equipped with food-grade silicon filling tubes, meeting the highest sanitary requirements.The
5. Tabletop Peristaltic Pump Liquid Filling Machine has an emergency stop button to protect the safety of operators.
6. Liquids run through switchable tubes only, providing easy clean up without the need for disassembling the machine itself.
7. Adjustable filling volume, speed, and interval time provide high filling flexibility. Connectable to a foot pedal; can be operated either by hand or foot.
8. Switchable filling tubes. Each can work with one kind of liquid, eliminating the possibility of cross-contamination.
9. Solid-body design provides high stability and durability.
10. Small in size, providing space efficiency and mobility.

11. The tabletop peristaltic pump filling machine FT1000 works best with liquids under 60 degrees Celsius.
12. Tabletop Peristaltic Pump Liquid Filling Machine is made of SUS 316 stainless steel, meeting the cGMP level sanitary requirement.

Specification

- **Filling range**: 5~500ml
- **Filling speed**: 5- 50ml/sec
- **Filling accuracy**: ±0.5%~1%
- **Power supply**: 110 or 220VAC; 50Hz/60Hz; single phase
- **Machine dimension** : (L)459.7mm(W)493.4mm(H)419.1mm

Option Accessories

- Automatic pneumatic shut-off valve.
- Diving filling nozzle
- Customized stainless steel hopper
- Electrical scale

Categories: Filling Machine, Semi Automatic Filling Machine



COMPACT FILLING LINE (FILLER/CAPPER/LABELER)

SKU: N/A

Compact Filling Line (Filler/Capper/Labeler) is the best solution for an automatic filling line for flexible, small-scale production. Integrating a feeding turntable, filling machine, capping machine, and labeling machine provides consistent action without downtime and reduces operators' injuries. Just one machine can fill all your small bottles.

1. Allowed to connect with any tabletop filling machine.
2. The entire star wheel can be replaced easily for different sizes of bottles.
3. Pneumatic bottle positioning system for precise bottle positioning.

Features

1. Compact Filling Line is able to handle screw caps or other screw caps with a special shape of caps.
2. Compact Filling Line is equipped with a bottle feeding turntable to save manpower and empty bottle feeding time.
3. The speed of the feeding turntable is adjustable according to requirements.
4. Allowed to connect with any kind of tabletop filling machine.
5. Precise detection system, no bottle, no filling, and capping.
6. The entire star wheel can be replaced easily for different sizes of bottles.
7. All settings, including filler and capper, can be set on the touchscreen.
8. No caps alarm stops the running machine if there are no caps under the capping head.
9. Capping height can be adjusted by a numeric hand wheel.
10. Pneumatic bottle positioning system for precise bottle positioning.
11. Compact Filling Line is made of stainless steel and high-grade anodized aluminum.
12. Small batch production is easy and efficient with Compact Filling Line

Specification

- **Filling range**: 5-150ml
- **Capping speed**: 1000/hr (depends on bottle and cap size)
- **Cap type**: caps
- **Bottle size**: Dia : 15~50mm / Height : 30~60mm
- **Voltage**: 110 or 220 VAC

Option Accessories

- Customized star wheel

Categories: Semi Automatic Filling Machine, Filling Machine



AUTOMATIC SMALL BOTTLES FILLING CAPPING LABELING LINE (INCLUDING CAP PLACING MACHINE)

SKU: FC1050

Automatic Small Bottles Filling Capping Labeling Line

Who says that Automatic Small Bottles Filling Capping Labeling Line can only choose large equipment? Neostarpack will dispel the myth that automatic filling production line is only for the large machines.

It is often seen that when customers purchase Automatic Small Bottles Filling Capping Labeling Line for bottles, they find that it is usually only the medium and large filling machines has the scale of automatic production lines. However, many customers have been confined to the limited production space, such as: high-level pharmaceutical preparations, laboratories, initial stage development of new products or medium-sized capacity requirements.

We have designed an automatic small bottles filling capping labeling line that combines the functions of filling, cap placing, capping, labeling and coding into it. It is very suitable for those who do not need high-speed mass production and only need small and medium-sized production capacity to meet the production needs.

This compact automatic small bottles filling capping labeling line has the automatic cap placing machine which is usually equipped for the large automatic filling production line. Moreover, it can also provide the output of up to 550 ~ 900 bottles per hour (It differs from product characteristics and the bottles).

Automatic Small Bottles Filling Capping Labeling Line Leads The Tabletop Filling And Capping Line To The Fully-Automated Level.

Generally, when filling a relatively viscous liquid, the working environment is dirty, or the precision is inaccurate due to the viscosity of the liquid. This small capacity viscous liquid filling and capping line can not only help you improve the cleanliness or being beset by the filling precision. This compact filling capping line is equipped with the cap placing device for fully automated filling machines.

The obvious difference between fully automated compact filling line and tabletop semi-automatic filling line is the active detection for cap placing device. It can save time for cap placing by hand. The extremity of the automatic compact filling line is equipped with a labeling machine, which can help you accurately stick the label and reduce the bubble generation rate when the bottle is labeled.

The Automatic Small Bottles Filling Capping Labeling Line with coder

allows you to print the manufacturing date, serial number and expiration date directly on the label.

Features

1. Suiting for the production of small capacity and viscous liquid products, which can be produced in different types by changing only a few parts.
2. It is suitable for filling products with high viscosity, such as cream, sauce, e-cigarette solution, pharmaceutical drug solution, etc.
3. It is easier to maintain the cleanliness of the work area during production
4. simplifies operation and easy to set up
5. Customized star wheel according to different sizes of the products, and additionally providing the small collecting turntable to choose.
6. Providing the customized automatic cap placing mechanism according to different sizes, shapes and material of the caps
7. Special bottle gripping system helps to position the capping and makes less error.
8. Labeling speed and label position can be adjusted.
9. Machine size is specially designed to meet space-constrained customers
10. Automatic Small Bottles Filling Capping Labeling Line is suitable for the production of liquid products with small capacity specifications
11. Automatic Small Bottles Filling Capping Labeling Line complies with cGMP specifications, the main mechanism adopts stainless steel 304, and customized design can be provided if there are special specifications.
12. It can be produced once the production data is set, and it's easy for the operator to start.
13. The automatic compact filling and capping line satisfies your needs to make production line into automatic production without occupying much pace
14. It has five functions: filling, automatic cap placing, capping, labeling and date or number coding. It can be connected or stand-alone operating.

Specification

- **Filling range**: 10-200ml
- **Filling speed**: 30-150ml/s (The production capacity will vary slightly depends on the viscosity of the liquid and the speed of the characteristics.)
- **Air requirement**: 90PSI/3CFM
- **Cap diameter**: Max. 30 mm (Depending on the size and shape of the cap, the speed of capping varies.)
- **Label size**: (W) 10~100mm / (L) 10~250mm
- **Label reel**: (ID) 75mm (OD) < 300mm

- **Power supply**: 110/220 VAC, single phase
- **Coding speed**: 100-120/min (Matching with the setting of the front-end equipment of the production line)
- **Coding width**: 1-3 lines, 1-14 words per line

Option Accessories

- Tabletop bottle collecting machine
- Customized star wheel module
- Mainframe is made of medical stainless steel
- Tabletop bottle feeding machine
- Different capacity and material storage buckets

Categories: Semi Automatic Filling Machine, Filling Machine

INDEX

A

Advanced Tabletop Gear Pump Liquid Filler 18
Automatic Small Bottles Filling Capping Labeling Line (Including Cap Placing Machine) 35

B

Big Volume Tabletop Piston Pump Liquid Filling Machine 10

C

Compact Filling Line (Filler/Capper/Labeler) 33

E

Energy Saving Ration Liquid Filling Machine 8

S

Semi-auto Tabletop Gear Pump Filling Machine FG1100 (Servo Model) 1
Semi-Automatic Piston Pump Filling Machine 23

T

Tabletop Gear Pump Liquid Filling Machine (tabletop filling machine) 21
Tabletop Overflow Filler 16
Tabletop Peristaltic Pump Liquid Filling Machine 29
Tabletop Piston Filling Machine 14
Tabletop Piston Pump Liquid Filling Machine 12
Two-nozzle bottle filler 27