TABLE OF CONTENTS

Filling Machine 3
Liquid Filling Machine 3
Vial Filling Capping Machine Equipment (Piston Pump Liquid Filler & Capper Line) 3
Fully Automated Filling-Capping-Labeling Production Line 7
Safety Cover High Speed Piston Pump Filling Machine 10
Automatic 6-Nozzle Piston Filler 17
Automatic Piston Liquid Filling Machine 20
Twelve Nozzle Automatic Lubricant Oil Filling Machine (Piston Pump) 22
Automatic Overflow Liquid Filler With Safety Gate 23
Automatic 6-Nozzle Overflow Filler 25
Automatic 4-Nozzle Overflow Filler 26
12 Nozzle Overflow Liquid Filler 28
Multi-nozzle Over-flow Liquid Filler 30
Automatic 8 Nozzles Gear Pump Liquid Filler 31
Automatic Bottle Filling Machine 35
Automatic Gear Pump Liquid Filler 37
Edible Oil Filling Packaging machine 39
Automated Chemical Products Filling Capping and Labeling Packaging Line 43
Semi Automatic Filling Machine 47
Semi-auto Tabletop Gear Pump Filling Machine FG1100 (Servo Model) 47
Energy Saving Ration Liquid Filling Machine 54
Big Volume Tabletop Piston Pump Liquid Filling Machine 56
Tabletop Piston Pump Liquid Filling Machine 58
Tabletop Piston Filling Machine 60
Tabletop Overflow Filler 62
Advanced Tabletop Gear Pump Liquid Filler 64
Tabletop Gear Pump Liquid Filling Machine (tabletop filling machine) 67

Semi-Automatic Piston Pump Filling Machine 69
Two-nozzle bottle filler 73
Tabletop Peristaltic Pump Liquid Filling Machine 75
Compact Filling Line (Filler/Capper/Labeler) 79
Automatic Small Bottles Filling Capping Labeling Line (Including Cap Placing Machine) 81

FILLING MACHINE

Quick Propack's industrial filling machines deliver precise, repeatable fills for liquids, powders, and viscous products across food, beverage, chemical, and pharmaceutical production lines. Choose from fully automatic liquid filling systems and semi-automatic bench-top models. All machines support 110/220V operation for seamless integration into U.S. and international production facilities.

LIQUID FILLING MACHINE

VIAL FILLING CAPPING MACHINE EQUIPMENT (PISTON PUMP LIQUID FILLER & CAPPER LINE)

SKU: FC4077

Vial Filling Capping Machine Equipment is combined with bottle infeed device, which means there are three functions in one frame, providing fully automatic bottle feeding, bottle positioning, liquid filling, cap placing, and cap screwing procedure; all mechanisms are synchronized that keep production from being interrupted.

Vial Filling Capping Machine Equipment is suitable for 2- 20ml small volume liquid filling and capping, and can be used on pharmaceutical, essential oil, injection, cosmetic, healthy beverage, and special solvent production.

Vial filling capping machine equipment is equipped with a high-accuracy liquid filler, automatic cap-placing, and an outstanding servo motor-driven system, which provides smooth and precise cap-placing, cap-screwing process. Besides, it’s simple to operate the machine because of the advanced control interface, and easy to fulfill both high speed and high accuracy production.

Furthermore, you could also enhance production efficiency and save the

costly manpower. Vial Filling Capping Machine Equipment consists of multiple stations: an automatic conveying device with a star wheel design. The first is a filling station; the second is an auto-cap-placing station; the third is a capping station, and the bottle outfeed machine is also available as an option.

Vial Filling Capping Machine Equipment is driven by a servo motor, and the operator can input the filling volume directly by using the human-machine interface, which can be used to quickly input parameters. And the filling accuracy of the instrument is excellent; the liquid storage tank can be customized according to your requirements.

This instrument has the automatic cap-placing and cap-screwing function, and can apply to every plastic screwing caps and aluminum caps; capping tightness can be adjusted by servo torque control via human machine interface.

The High Accuracy Small Volume Automatic Vial Filling Capping Machine, which has a Compact Design, Can Save Your Space and Manpower

Vial Filling Capping Machine Equipment has both filling and capping functions, and the two functions are constructed in a single machine frame, which provides the possibility to fit in a limited space and fulfill requirements from different industries. The instrument is adjustable depending on the size/shape of the bottle, and it is also equipped with a

star wheel that makes the filling-capping procedure more accurate.

Furthermore, different capping heads can apply to various types of caps, such as plastic caps, spray caps, dropper tip caps, and dropper caps for essential oils. According to your needs, the overall production speed is adjustable by the simple-operating human-machine touch screen. All filling parts that have contact with your product are made of stainless steel and sanitation materials, which can meet the high product quality standard.

An automatic small bottles filling and capping machine can be connected to a labeller or date coding machine, forming a fully automatic filling production line that can provide stable, highly efficient production. This automated production line is the best solution for small-volume bottles and flexible scale production.

Suitable for:

2-20 ml, small volume liquid, and different sizes/shapes of bottles for pharmaceutical, food, cosmetic, and cleaning industries.

Features

1. Vial Filling Capping Machine Equipment is equipped with a colored human-machine touch screen and a programmable logic control system(PLC), and the parameter setting is quick and simple.
2. Design: bottle feeding belt + 1000mm dividing plate + filling + cap placing + capping + collecting
3. Vial Filling Capping Machine Equipment is equipped with servo motors for high capping and filling accuracy by adjusting speed based on different bottle and cap sizes.
4. The advanced servo motor makes it possible to adjust the capping speed and capping torque, and provides high-accuracy capping.
5. The liquid hopper is located on the machine, so it doesn't require a larger space and can be easily refilled.
6. With the Polished, seamless one-piece hopper, there is no need to worry about liquid remaining, and it can be easily cleaned.
7. Vial Filling Capping Machine Equipment has a precise sensor that automatically detects whether a bottle jam/ overturned/ no-bottle situation has happened, and stops the production in response to ensure the bottle conveying process is smooth.
8. The missing cap will be found automatically by the sensor, and capping will stop automatically.
9. Vial Filling Capping Machine Equipment has a servo motor that provides a stable capping torque and ensures that every bottle cap has the same tightness.
10. Auto bottle detector for locating bottles while infusing and sorting; ensure accurate filling and capping.
11. The adjustment of filling volume and capping tightness requires

no tools, and the only thing you have to do is operate the human-machine interface.
12. Piston pump liquid filler & capper Line is made of stainless steel and hardened aluminum alloy, solidly constructed and easy to maintain.
13. The speed of the conveying belt and bottle infeed/outfeed device are synchronized, providing stable bottle transportation. The fence height is adjustable according to the bottle you used.
14. Vial filling capping machine complies with cGMP standard, and it has an automatic control system that works in the whole production procedure.
15. The optional star wheel for different sizes of bottles is available.
16. Can be applied to all pharmaceutical, food, biotech, and chemical bottle filling-capping production.
17. One single machine can apply to many kinds of products, and it's simple to change the module and clean the machine.
18. The machine is time-saving, easy operating and suitable for an inexperienced operator.
19. Infeeding and outfeeding belt is designed for smooth conveyance without bottles getting inverted.
20. Made of SUS#304 stainless steel and aluminum alloy for frame construction for easy maintenance and longevity.

Specification

- **Hopper size**: 10- 20L
- **Filling range**: 2- 20ml
- **Overall speed**: 10- 30 bpm
- **Filling accuracy**： ±0.5%
- **Cap types**: all cap types
- **Power supply**: 220VAC, 50Hz; single phase
- **Dimension**: (L)2188mm (W)1878mm (H)1570mm

Option Accessories

- Different sizes of capping heads
- Different sizes of star wheels
- Automatic feeding machine
- Automatic labeling machine

Categories: Liquid Filling Machine, Filling Machine

FULLY AUTOMATED FILLING-CAPPING-LABELING PRODUCTION LINE

SKU: FG5470-CS4150-LD4000

Fully Automated Filling-Capping-Labeling Production Line is widely used in food and beverage plants, pharmaceutical plants, plants of body-care products, plants of cleaning supplies, chemical plants, etc. It is suitable for factory automation, integrating the processes of filling, capping, and labeling into a smooth flow production line. This model uses a high-level interface control system for fast speed and high-precision operation. Thus, the process efficiency improves, and the labor costs are saved.

High Quality Automated Filling, Capping, and Labeling Production Line

1. Special leak-proof design for filling valve and anti-flow device to maintain high-quality filling.
2. Multiple memory parameters - The Operator can access the stored data quickly and start up the production immediately.
3. The microcomputer-controlled system is flexible for label dispensing selection: single or dual dispensing, or even single-sided dispensing.

QUICK 3PL
LOGISTICS SIMPLIFIED

Features

1. Fully Automated Filling-Capping-Labeling Production Line is driven by a high-end servo motor, filling simultaneously by multiple pumps, making various modes available: manual weighing mode and auto-quantitative filling mode.
2. Setting and adjusting the filling volume are easy by using the colorful touch screen of the intelligent PLC control system.
3. Special leak-proof design for filling valve and anti-flow device to maintain high-quality filling.
4. Fully Automated Filling-Capping-Labeling Production Line is equipped with an emergency stop button, and the safety warning device can immediately alert the operator to operational problems.
5. Heavy-duty and rigid construction: made of stainless steel that conforms to pharmaceutical cGMP rules.
6. Multiple memory parameters—The Operator can access the stored data quickly and start up the production immediately.
7. Fully Automated Filling-Capping-Labeling Production Line is driven by a servo motor, making the capping function precise and fast; most kinds of caps can be used with the change of the cap head only.
8. Fully Automated Filling-Capping-Labeling Production Line has a capping mechanism driven by dual servo motors that generates appropriate torque to maintain the high capping quality without

wear damage to the bottle.
9. Digitized rail control makes the cap feeding smooth, and the functions of positioning, dispensing, and placing are accurate.
10. The use of a made-in-Japan photoelectric eye, the sensing system can automatically shut down when the production line jams, and it can restart when the line becomes smooth.
11. Both the height and the angle of the dual label applicators can be fine-adjusted for fast changeover.
12. Fully Automated Filling-Capping-Labeling Production Line has a microcomputer-controlled system that is flexible for label dispensing selection: single or dual dispensing, or even single-sided dispensing.
13. Fully Automated Filling-Capping-Labeling Production Line has an intelligent control system that gives an alert message when the label is missing, broken, or end-of-reel.
14. Use of high-tech driving mechanism, bottles are positioned precisely; when the line overloads, it automatically shuts down in order to protect the products as well as the machine.
15. The machine applies a modular design principle, which can be integrated upward or downward effectively to meet the diverse needs of the product mix.

Specification

Liquid Filler Machine

- **Filling range**: 50~4000ml
- **Filling accuracy**: ± 0.5%~1%
- **Tank size**: 100~200L
- **Power supply**: single phase, 220VAC, 50/60Hz
- **Machine size**: (L)5125mm (W)1528mm (H)2398mm

Automatic Capper Machine

- **Capping speed:** 20~40 pcs/min (depends on bottle and cap size)
- **Cap diameter**: 22~120 mm
- **Cap type**: screw cap or press cap
- **Air pressure requirement**: 4~6 Kg
- **Voltage**: 110 or 220 VAC

Labeler

- **Product size**: O.D. 20 mm- 125 mm, Height 30-160 mm
- **Label size**: width 10~100mm, length 20-300mm
- **Label reel**: I.D. 75mm O.D. ≦300mm
- **Conveyor**: 200 mm (full size), or other size by special request
- **Machine size**: (L) 2100mm (W)1380mm (H)1500mm

Option Accessories

- High hygiene level, airtight protective cover
- feeding turntable, collecting turntable
- Date coder

Categories: Filling Machine, Liquid Filling Machine

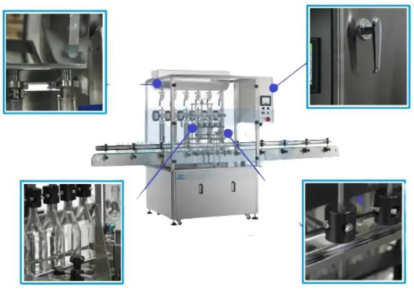

SAFETY COVER HIGH SPEED PISTON PUMP FILLING MACHINE

SKU: FP5300

Safety Cover High Speed Piston Pump Filling Machine establishes a new standard with its cutting-edge technology and extraordinary quality for food, beverage, and viscous liquid filling industries, on the product lines where high efficiency and sanitation are a must. FP5300 can not only fill various liquids accurately and quickly, including high mobility, high viscosity liquids, and liquids with small particles, but it is also the prime choice when it comes to filling highly viscous products.

Your ideal choice with food, beverage, and viscous liquid

Safety Cover High Speed Piston Pump Filling Machine's strength lies within its flexibility to expand the filling heads up to 12. Furthermore, the advanced PLC control system, paired with a control motor, offers you precise filling volume and filling speed, ensuring the accuracy and consistency of each filling process.

The automatic bottle detection function will stop the machine when there are no bottles, reducing waste and increasing safety. Operators may set the filling volume and speed with ease through the human-machine interface, making changing product lines easier than ever. From beverage and medicine to daily use chemical products, high mobility, or high viscosity liquids, 50ml to 4000ml, our machine can fill all of them with high efficiency.

With broad applications, the Safety Cover High Speed Piston Pump Filling Machine raises the competitiveness of the products.

FP5300 Piston Pump Filling Machine is applicable for various bottles with different volumes and for various industries such as food, beverage, pharmaceutical, biotechnology, cosmetics, and chemistry. Whether it is ketchup, mustard, apple sauce, engine oil, cosmetics, medicine, or other diverse liquid or semi-liquid products, our machines can fulfill the needs for accuracy, sanitation, and high efficiency.

Integrating with product lines will increase both the efficiency and the quality of products, and also ensure the safety and sanitation of products during the filling process. It is essential to choose the proper equipment to increase efficiency and to ensure product quality on the fast-paced product lines. And our marine grade stainless steel filling machines provide revolutionary advancement to the production process with their excellent performance and Innovative technology, making FP5300 the ideal choice for all kinds of liquid filling.

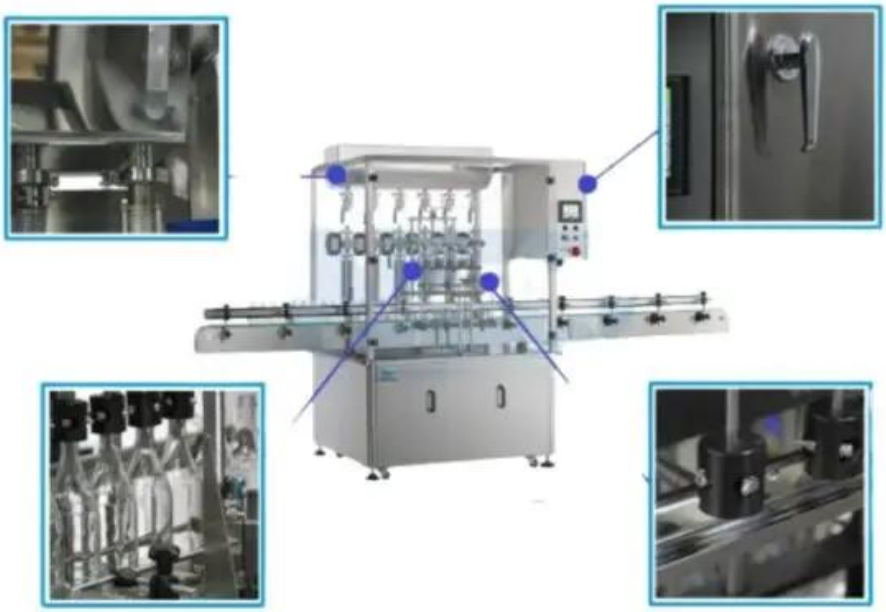

Advantages:

1. Marine-grade stainless material: Corrosion-resistant, firm, durable, and easy to clean.
2. Improvement to automatic production lines: **Safety Cover High Speed Piston Pump Filling Machine** can link with the connection signals of previous or later packaging machines, building an automatic production line to increase production speed and efficiency, and to decrease manual maneuver mistakes.
3. State-of-the-art PLC system: Equipped with an advanced PLC system to monitor the product line in real-time and optimize the production process and management.
4. Innovative filling head design: Safety Cover High Speed Piston Pump Filling Machine is specially crafted with anti-collision filling heads and holders that can align the neck finishes, making sure the filling heads will not collide with the neck finishes while doing minor adjustments to the position of neck finishes to prevent vessel wear and defects.
5. Safety cover design: Improved safety, effectively preventing the risks of spilling during the production of corrosive chemical products.

Applicable products:

Piston Pump Filling Machines are of broad applications with various products; they are especially suitable for filling liquid, paste, and viscous products.

Food: Juice, honey, custard, jam, ketchup, mustard, barbecue sauce, salad dressing, syrup, mayonnaise, olive oil, sesame oil, rapeseed oil, yogurt, hummus, pate, and salsa sauce.

Pharmaceutical & Biotechnology: Liquid medicine, injection, suspension, biologics, oral liquid, dietary supplement, and nutritional supplement.

Cosmetics & Personal Care Products: Body lotion, cleansing oil, shower gel, toner, essence, hand wash, shampoo, conditioner, hair gel, lotion, and nail polish.

Chemicals & Agricultural Products: Detergent, dishwashing liquid, car wash soaps, engine oil, buffer solution, water-based paint, degreaser, lubricant, pet shampoo, laundry detergent, liquid fertilizer, pesticide, organic fertilizer, brake fluid, and liquid wax.

QUICK 3PL
LOGISTICS SIMPLIFIED

Applicable Industries:

Pharmaceutical, food processing, bakery, biotechnology, cosmetics, chemical, daily use chemical, and electronics industries etc.

Applicable Vessels:

Various plastic bottles, glass bottles, ampoules, metal bottles and cans, and ceramic bottles and jars.

Applicable Vessel Shape:

Round bottles, square bottles, jars, straight neck finish glass bottles, flat bottles, conical flasks, and bottles and cans with special shapes.

Applicable Liquid:

Mobile liquids that have no particles, viscous liquids, or liquids with temperatures below 40 Celsius.

(The machines can be customized if there is a need to fill with high-temperature liquid.)

QUICK 3PL
LOGISTICS SIMPLIFIED

Filling Speed:
Filling speed: 25 to 40 bottles/min (The speed depends on liquid characteristics and volumes.)

Filling Method:
The following are the operation steps of our filling machines, demonstrating their highly efficient and accurate characteristics:

1. Starting process: Press the Start button when operating to initiate the filling process.
2. Locate the bottles: The spacer cylinders extend, accurately placing six bottles under the filling heads.
3. Precise Filling: The infeed cylinder extends, blocking the bottles behind, then the filling heads descend to the default filling position and start precise filling.
4. Filling complete: After filling is completed, the filling heads ascend back up to the standby position, and the spacer cylinder retracts. The bottles move on to the next production stage.
   The simplicity of maneuver increases the production lines' efficiency during the whole filling process. Ensuring precise filling and quality.

Machine Layout:

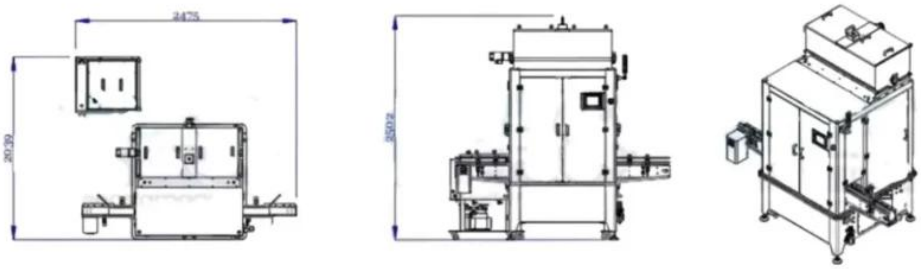

Features

1. High sanitation specification: Full cover design, equipped with PVC cover. Meeting cGMP requirements and providing high sanitation standards.
2. Intelligent maneuver: Safety Cover High Speed Piston Pump Filling Machine has a multiple memory function to simplify production settings.
3. Precise filling: Safety Cover High Speed Piston Pump Filling Machine is equipped with a counting function, and the automatic detection system will stop the machine when there are no bottles.
4. Highly efficient production: Servo motor driven, with multiple cylinders filling at once to increase production efficiency.
5. Unique filling valve: Anti-drip design with ball valve check device to make sure filling liquid does not spill and ensure filling quality.
6. Intuitive human-machine interface: Intuitive HMI with comprehensible features, making maneuver methods easy to learn. Shortening employee training time.
7. Intelligent memory system: Multiple parameters storage memories, no need to reset or adjust the machine during production. Simplifying the maneuver process and increasing production efficiency.
8. Production warning system: Safety Cover High Speed Piston Pump Filling Machine is equipped with refined sensor detection technology, the machine would not fill if there were no bottles. And it can prevent bottle jams by pausing the machine automatically, ensuring the filling efficiency and stability.
9. Counting function: The Safety Cover High Speed Piston Pump Filling Machine can record the batch on the production line and the accuracy of the production line parameters.
10. Infeed and outfeed system: Automatic process, adjusting along with the conveyor to acquire more production flexibility.
11. High-end servo motor: Safety Cover High Speed Piston Pump Filling Machine has multiple filling gates that fill at once to achieve high accuracy and rapid production.
12. Emergency stop button: Immediate reaction during the production

process to ensure production safety.

13. Full-color touch screen and PLC control: Adjust the filling volume, speed, and interval time with ease.
14. Firm structure: Adopting SUS316 or 316L stainless steel that is corrosion resistant and firm, all meet cGMP manufacturing requirements.
15. Detachable and washable parts: The parts that come into contact with liquid, such as the hopper, suction tube, filling heads, and filling cylinders, can all be disassembled and washed with ease, meeting the sanitation standards of food processing industries.
16. Waterproof materials made machine: Safety Cover High Speed Piston Pump Filling Machine is made from waterproof materials to protect precision electronics from being damaged when washing the machine, ensuring the durability of the machine.
17. User-friendly design: Safety Cover High Speed Piston Pump Filling Machine is equipped with rulers and marked with arrow labels that indicate the direction so the users can adjust the positions of bottles, filling heads, and cylinders to minimize the collision or damage of bottles.
18. Optional transparent PVC infeed tube: Understand production status at a single glance, enhancing the transparency and controllability during the production process.
19. Cylinder gate spacer system: Adopting advanced cylinder gate technology to control the infeed and outfeed of bottles with precision. Guarantees the smoothness of the production process and prevents the bottles from jamming.
20. Predictive maintenance function: Predictive maintenance capability. Quick troubleshooting through multiple alarm pages and detailed explanations significantly reduces out-of-service time.
21. Emergency stop mechanism: HMI and the conveyor each have an emergency stop button beside them, raising the safety and security during the production process.
22. Integrated packaging line: The machine can be integrated with other packaging devices such as bottle unscramblers, capping machines, labeling machines, metal detectors, etc., to build automatic production lines.
23. Full-color touch screen integrated with an intelligent PLC control program, making monitoring devices easy during production.

Specification

- **Filling Head Number**: Filling Heads
- **Filling Method**： Piston Pump Filling Cylinders
- **Degree of Automation**： Fully Automatic
- **Filling Speed:** 15- 40 bottles/min (The speed depends on liquid characteristics and bottle volume)
- **Filling Accuracy**： ± 0.5-1%
- **Filling Range:** 50- 4000 ml (Customizable)
- **Suitable Liquid**： Cream/Sauce/Honey/ Shower Gel /Shampoo
- **Liquid Container Specification**: 100- 200 L (Customizable)
- **Power Supply Requirements**： 110 or 220VAC, 50/60Hz, Single

Phase
- **Machine Dimension**：(L)3000mm (W)1800mm (H)2000mm
- **Origin of goods**： Taiwan
- **Warranty Period**： A year
- *** Dimensions may vary based on configurations; actual specifications are subject to the machine received.**

Option Accessories

- Weight Detection System
- Bottle Handles Direction Detection System
- Infeed/Outfeed Table
- Spills Visual System
- Sealed Safety Cover
- Customized Large Liquid Container
- Customized Filling Cylinders
- Diving Filling Heads: Ensuring liquid will not spill and reducing foaming
- Heated Hopper
- Parts suitable for high-temperature liquid filling
- Products mixing and blending system
- Washable Electric Machine System & Controller
- Various Filling Range

Categories: Filling Machine, Liquid Filling Machine

AUTOMATIC 6-NOZZLE PISTON FILLER

SKU: FP4300

Automatic 6-Nozzle Piston Filler utilizes a linear conveyor, with a servo motor controlling the fast, precise, simultaneous filling of all six nozzles. For safety, the automatic bottle detection sensor stops the nozzles when an empty space is detected. The emergency stop button allows immediate cessation of all operations if needed.

The Automatic 6-Nozzle Piston Filler has a wide filling range, suitable for any particle-free and various low viscosity liquids on the market, including medicine, chemicals, oils, dairy, soy sauce, lotion, body wash, detergent, and other such free-flowing liquids.

The touchscreen HMI makes changing products quick and easy, and reduces downtime between batches. When changing products, there are no parts that need to be replaced. It's perfect for large-scale production because of its six nozzles, wide filling range, and precise filling levels. The stainless-steel frame guarantees resilience and ease of maintenance.

QUICK 3PL
LOGISTICS SIMPLIFIED

Advantages

1. Automatic 6 Nozzles Piston Filler fills 12 ~ 30 bottles per minute (depending on liquid viscosity and container size)
2. Automatic 6 Nozzles Piston Filler can fill all sizes and types of bottles

Application & Advantage

Suitable for:

Water, soy sauce, essences, drinks, liquid face masks, shampoo, detergents, cleansers, perfume, essential oils, lotion, medication, eye drops, juice, alcohol, serums.

Suitable fields

Pharmaceuticals, food and drink, chemicals, cosmetics

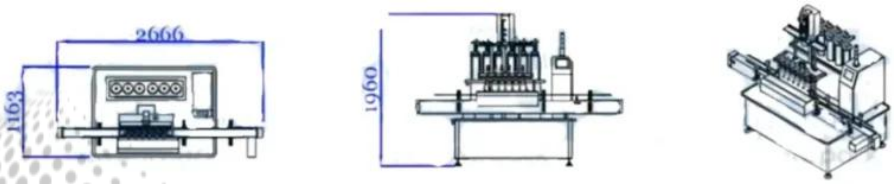

QUICK 3PL
LOGISTICS SIMPLIFIED

Features

1. High-class Japanese Mitsubishi servo motor for accurate and speedy production.
2. Filling speed, volume, and time interval can be set with the PLC control system's color HMI touch panel.
3. Automatic 6-Nozzle Piston Filler automatically saves filling parameters for future operation and settings.
4. Automatic bottle spacer and positioning system for continuous operation
5. Multiple filling modes for different liquids (above/below liquid surface or fixed-point filling).
6. Automatic 6-Nozzle Piston Filler is equipped with an emergency button and a production warning system for safety concerns.
7. Tricolor warning lights
8. Production detecting system prevents bottle jams.
9. Any leaking problem can be immediately detected and corrected.
10. Ball-valve shut-off nozzle prevents liquid from dripping.
11. Automatic 6-Nozzle Piston Filler is made of anti-corrosion stainless steel that meets cGMP standards.
12. Suitable for different bottle shapes – round, oval, square, or flat-based bottles.
13. Stainless steel conveyor frame and bottle guide.
14. Filling tank sends material directly into bottles to reduce

contamination.
15. Smart filling reduces filling errors when there are no bottles.
16. Diving filling nozzles prevent splashing and foaming.
17. The bottle separating system positions bottles accurately.
18. Multiple-gear pump control simultaneously achieves precise filling.
19. Automatic 6-Nozzle Piston Filler has a closed filling system for safety and hygiene.
20. Some gear pumps fill simultaneously to achieve high accuracy at high speed.
21. Equipped with a spacer to make a precise filling position.
22. Accumulated tray underneath the nozzles.
23. Automatic 6-Nozzle Piston Filler can be connected with a production line or work independently.

Specification

- **Filling Accuracy**: ±0.5% ~ 1%
- **Filling Volume**: 50ml - 4000ml
- **Power Supply Requirements**: 110 or 220 VAC; 50Hz; Single phase
- **Machine Dimensions**: (L) 2666mm (W) 1663mm (H) 1960mm

*** Actual product specifications may vary.**

QUICK 3PL
LOGISTICS SIMPLIFIED

Option Accessories

- Protective casing
- Thermal transfer printer
- Infeed and outfeed turntables
- Filling modules (piston, peristaltic, etc.)
- Capper and labeler for the full production line
- Feeding tray
- Customized stainless steel source hopper

Categories: Liquid Filling Machine, Filling Machine

AUTOMATIC PISTON LIQUID FILLING MACHINE

SKU: N/A

Automatic Piston Liquid Filling Machine is designed for general flowing liquids and liquids with higher consistency. Two nozzles are suitable for small production with various kinds of bottles. Tool-less changeover is easy, and all adjustments can be made on a colorful touchscreen.

Features

1. Automatic Piston Liquid Filling Machine is equipped with diving nozzles as an anti-bubble device for subsurface filling of foaming products.
2. Two filling nozzles to fill two bottles at one time.
3. Both round bottles and rectangular bottles can be adopted easily without an additional device.
4. Automatic Piston Liquid Filling Machine has fiber optic sensors for container gating.
5. Pneumatic shut-off nozzle prevents liquid from dripping down.
6. 100 L stainless steel #SUS 316 tank (Option).
7. Automatic Piston Liquid Filling Machine provides several operating modes for different production requirements.
8. Adopt advanced servo motor to enable multi-filling-cylinders to fill synchronously to provide a high-accuracy production process at high speed.
9. Made of corrosion-resistant stainless steel to meet cGMP standards.
10. 2.5 L filling cylinder to achieve high filling volume.

Specification

- **Liquid**: Less to thick liquid
- **Speed**: 3bpm (5L bottle)
- **Filling range**: 1~5L
- **Control system:** PLC+HMI system
- **Power supply**: 110v or 220v, single phase
- **Dimension**: (L)3000 (W)1018 (H)2425 mm

Option Accessories

- SUS 316 or plastic wetted contact parts.
- Modifications for large containers
- Customized tank

- Bottle feeding device

Categories: Filling Machine, Liquid Filling Machine

TWELVE NOZZLE AUTOMATIC LUBRICANT OIL FILLING MACHINE (PISTON PUMP)

SKU: FP4670

Twelve Nozzle Automatic Lubricant Oil Filling Machine works well with any free-flowing liquid or thick products like shampoo or paste. Controlled by PLC and HMI control system for ease of operation. With a tool-free disassembling design and a customized filling nozzle, the Twelve Nozzle Automatic Lubricant Oil Filling Machine can surely boost production and efficiency.

Features

1. Servo-driven piston for accurate filling quality.
2. Pneumatic shut-off nozzle prevents liquid from dripping down.
3. Nozzle spacing and height is adjusted by top hand wheel and screw.
4. Twelve Nozzle Automatic Lubricant Oil Filling Machine is available for bottom-up filling for foamy liquid.
5. Pneumatic bottle indexing system or screw bottle indexing system.
6. AC motor-driven filling bracket makes the bracket move smoothly without shaking.
7. Pneumatic stainless steel drip tray to keep a sanitary environment.
8. Twelve Nozzle Automatic Lubricant Oil Filling Machine bottle back-up sensor that delays operation until the jam is cleared.
9. No change parts needed as changing bottles.

Specification

- **Filling range**: 1~5L (can be customized)
- **Filling speed**: 25~40 bottles/min
- **Air pressure requirement**: kg
- **Power supply**: 110V or 220VAC, 50/60Hz

Option Accessories

- Infeed / Outfeed turntable.
- Customized tank.
- PVC anti-dust protecting case.

Categories: Filling Machine, Liquid Filling Machine

AUTOMATIC OVERFLOW LIQUID FILLER WITH SAFETY GATE

SKU: FL5250

Automatic Overflow Liquid Filler With Safety Gate is designed for mineral water filling requirements with massive volume. The liquid level of every bottle will be the same, and the surplus bubbles will overflow into the reservoir. It is especially suited for foamy liquids.

Features

1. An anti-dust housing is installed to make sure the machine complies with the standard of food hygiene.
2. Automatic conveyor-mounted bottle indexing gates to control container movement.
3. Filler frame is fully enclosed with stainless steel panels and a gasketed access door.
4. Automatic Overflow Liquid Filler With Safety Gate suits free-flowing liquid filling requirements like water and juice.
5. Controlled by PLC with color touch screen: filling volume, speed, and interval time can be adjusted directly on the touch screen without mechanical adjustment.
6. Four filling nozzles to fill four bottles at one time.
7. Heads sink into bottles to decrease bubbles.
8. Both round bottles and rectangular bottles can be adopted easily without an additional device.
9. Surplus liquid and bubbles overflow back to the reservoir.
10. Dipping nozzles prevent spillage and diminish bubbles.
11. Fiber optic sensors for container gating.
12. Automatic Overflow Liquid Filler With Safety Gate can be customized according to different liquids.
13. User-friendly control system with touch screen for ease of adjustment.

Specification

- Liquid: Free-flowing liquid
- Speed: 3bpm (5L bottle)
- Filling range: 1~5L
- Control system: PLC+HMI system
- Power supply: 110v or 220v, single phase

Option Accessories

- Modifications for large containers
- Customized tank
- Bottle feeding device

Categories: Filling Machine, Liquid Filling Machine

AUTOMATIC 6-NOZZLE OVERFLOW FILLER

SKU: FL4350

Automatic 6-Nozzle Overflow Filler is best suitable for filling with foamy, flammable, corrosive liquid products, or products that require a consistent filling level. The number of nozzles can be customized according to your needs, and the filler can also be connected with other packaging machines to build up a complete production line.

Features

1. Lower cost choice with effective productivity.
2. Overflow filling system: No different liquid level problem.
3. Automatic 6-Nozzle Overflow Filler is best for filling foamy products at higher speeds.
4. Automatic 6-Nozzle Overflow Filler can be customized for flammable or corrosive liquids.
5. Excess liquid or foam will overflow back to the reservoir.
6. Anti-dripping tray: keeps the machine clean.
7. Controlled by PLC with HMI color touch screen.
8. All liquid contacting parts are made of stainless steel or sanitary materials
9. Automatic 6-Nozzle Overflow Filler made of heavy-duty stainless steel construction with casters.

Specification

- **Filling speed**: 25~40 bpm (depends on product viscosity and bottle size)
- **Filling range**: 100~4000ml (can be customized)
- **Accuracy** : ± 1%
- **Voltage**: 110 or 220 VAC

Option Accessories

- Feeding/collecting turntable
- Customized tank
- Anti-dust protective case

Categories: Filling Machine, Liquid Filling Machine

AUTOMATIC 4-NOZZLE OVERFLOW FILLER

SKU: FL4250

Automatic 4-nozzle overflow filler is designed for mineral water filling requirements with massive volume. The liquid level of every bottle will be the same, and the surplus bubbles will overflow into the reservoir. It is especially suited for foamy liquid.

Features

1. Automatic 4-nozzle overflow filler suits for free-flowing liquid filling requirements like water and juice.
2. Four filling nozzles to fill four bottles at one time.
3. Heads lower into bottles to decrease bubbles.
4. Both round bottles and rectangular bottles can be adopted easily without an additional device.
5. Surplus liquid and bubbles overflow back to the reservoir.
6. Dipping nozzles prevent spillage and diminish bubbles.
7. Fiber optic sensors for container gating.
8. 100 L stainless steel #SUS 316 tank (Option).
9. Automatic 4-nozzle overflow filler can be customized according to different liquids.
10. Automatic 4-nozzle overflow filler user-friendly control system with touch screen for ease of adjustment.

Specification

- **Liquid**: Free-flowing liquid
- **Speed**: 3bpm (5L bottle)
- **Filling range**: 1~5L
- **Control system**: PLC+HMI system
- **Power supply** : 110v or 220v, single phase
- **Dimension**: (L)3000mm (W)1018mm (H)1777 mm

Option Accessories

- SUS 316 or plastic wetted contact parts.
- Modifications for large containers
- Customized tank
- Bottle feeding device

Categories: Filling Machine, Liquid Filling Machine

QUICK 3PL
LOGISTICS SIMPLIFIED

12 NOZZLE OVERFLOW LIQUID FILLER

SKU: FL4670

12 Nozzle Overflow Liquid Filler is built to meet the requirement of a consistent filling level. It is especially suited for foamy, flammable, or corrosive liquid filling. Moreover, with PLC and HMI control systems, all filling parameters can be set and monitored on screen easily. The number of filling nozzles or other options, like a product supply pump, is available according to different requirements. 12 Nozzle Overflow Liquid Filler is the best choice for your company.

Features

1. The filling level of every bottle is consistent.
2. The height of the filling level can be adjusted according to the requirement.
3. Nozzle spacing and height is adjusted by top hand wheel and screw.
4. Can be customized for flammable or corrosive liquids.
5. Excess liquid or foam will overflow back to the reservoir.
6. Variable filling speed control.
7. Pneumatic bottle indexing system or screw bottle indexing system.
8. Diving nozzles can be chosen for foamy liquid.
9. No change parts needed as changing bottles.
10. All liquid contact parts are made of stainless steel and are sanitary.
11. 12 Nozzle Overflow Liquid Filler is made of heavy-duty stainless steel construction with casters.

Specification

- **Filling range**: 1~5L (can be customized)
- **Filling speed**: 25~40 bottles/min
- **Power supply**: 110V or 220VAC, 50/60Hz

Option Accessories

- Infeed / Outfeed turntable.
- Customized tank.
- PVC anti-dust protecting case.

Categories: Liquid Filling Machine, Filling Machine

QUICK 3PL
LOGISTICS SIMPLIFIED

MULTI-NOZZLE OVER-FLOW LIQUID FILLER

SKU: FL4550

Multi-nozzle Over-Flow Liquid Filler is suitable for free-flowing liquids such as water, juice, alcoholic beverages, etc. Multi-nozzle fills simultaneously to achieve high productivity.

Features

1. Multi-nozzle Over-Flow Liquid Filler suits for free-flowing liquids such as water, lotion, shampoo, etc.
2. No bottle, no fill.
3. Multi-nozzle Over-Flow Liquid Filler has some nozzles that fill simultaneously to achieve excellent precision at high speed.
4. Multi-nozzle Over-Flow Liquid Filler can be widely used for variable filling volumes.
5. Equipped with a spacer to make a precise filling position.
6. Emergency button, three-color emergency light.
7. Controlled by a PLC system with an LED screen, easy to read and set.
8. Multi-nozzle Over-Flow Liquid Filler is made of corrosion-resistant stainless steel to meet cGMP standards.
9. Accumulated tray underneath the nozzles.
10. Multi-nozzle Over-Flow Liquid Filler can be connected with a production line or work independently

Specification

- **Voltage**: 110 or 220
- **Filling range**: 250 - 3000ml
- **Filling accuracy**: 0.5%~1%
- **Dimension**: (L)3400mm (W)800mm (H)1500mm

Option Accessories

- Feeding tray
- Protect casing

Categories: Liquid Filling Machine, Filling Machine

AUTOMATIC 8 NOZZLES GEAR PUMP LIQUID FILLER

SKU: FG5400

Automatic 8 Nozzles Gear Pump Liquid Filler, high-speed lubricant filler is suitable for lubricant oil filling requirements with massive filling volume from 1 liter to 5 liters. Controlled by a servo motor makes filling precise, and each nozzle can be adjusted individually. The 8-nozzle filling machine fills simultaneously with eight industrial-level nozzles for large-quantity production.

It's incredibly convenient to use, since it comes with a PLC control system with an HMI touch panel. The interface allows the operator to save up to 20 production parameters simultaneously, so that downtime is reduced between batches. Adjustments are simple - filling volume and speed can be changed via the touchscreen, and the nozzles can be positioned according to the size of the bottles. The frame of the machine itself is mounted on wheels so that it can be moved around.

It's highly precise and can be used for all sorts of liquids such as engine oil, chemicals, drinks, liquid face masks, essences, essential oils, detergent, shampoo, cleanser, syrup, perfume, medication, eye drops, water, and more.

It can be used with optional diving nozzles that reduce foaming, bubbling, and splashing, which often cause sanitary issues with food- and medical-grade products, and waste products.

The nozzles dive into the bottles and follow the liquid as it rises, keeping the distance between the nozzle and water level at a minimum and thus ensuring smooth filling.

The automatic 8-head liquid filling machine is made of SUS 304, 316 stainless steel, and aluminum alloy, meeting cGMP level sanitary requirements. The conveyor belt is made of chained slats, which are easy to remove and clean.

The machine is also equipped with several safety features, including an emergency stop button that pauses all operations, a production warning system that alerts operators of any abnormalities, and a safety cover for protects the operators.

The 8-head filling machine includes a 200L filling tank for large-scale filling, which can be replaced with a customized one if needed. The infeed and outfeed gates position bottles accurately, and a drip tray is positioned under the nozzles to catch any droplets.

Automatic pneumatic shut-off nozzles are available and are especially recommended for liquids that leak easily to enhance the anti-drip

function.

Furthermore, other optional add-ons are available, such as a capping machine, labeling machine, infeed turntable, or outfeed turntable. While the machine can be used on its own, connecting it with these other machines creates a far more efficient automatic production line.

Advantages

1. Parameters can be adjusted using the touchscreen
2. The adjustments are easy to learn
3. Customizable design
4. Can be used in a full production line
5. Large-volume filling: 50 ~ 5000ml (can be customized)
6. Can fill all sizes and types of bottles
7. Filling precision within a 0.5% ~ 1% margin of error
8. Suitable for free-flowing liquids under 6000 cps
9. Fills 20 ~ 60 bottles per minute (depending on liquid viscosity and container size)

Application & Advantage

Suitable for

Low-viscosity liquids (below 40°C), such as drinks, liquid face masks, essences, essential oils, detergent, shampoo, cleanser, syrup, perfume, medication, eye drops, water, and engine oil.

Suitable containers

Plastic bottles, glass bottles, aluminum cans, and metal cans.

Suitable fields

Pharmaceuticals, food and drink, chemicals, cosmetics.

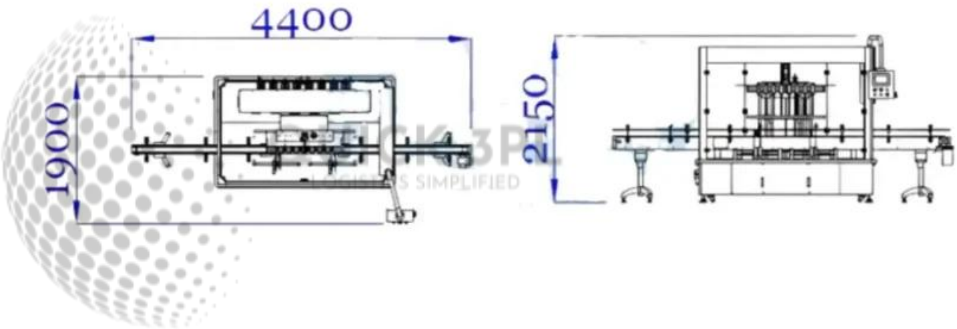

Features

1. Simultaneous filling with eight nozzles for high precision filling
2. Automatic 8 Nozzles Gear Pump Liquid Filler adopted a lubricant oil pump for precise and smooth filling.
3. Servo motor controls each filling nozzle individually and ensures accurate filling.
4. Pneumatic shut-off nozzle prevents liquid from dripping.
5. Pneumatic bottle positioning system and diving nozzle for precise filling.
6. Pneumatic drip tray with surplus oil backflow system.
7. Anti-bottle backup sensor ensures smooth transferring without jamming.
8. Recipes for instantaneous changeover for different products can be stored as a memory parameter.
9. Tank with product re-fill system and alarm for out of liquid.
10. Touchscreen to set filling volume, speed, and interval time of each nozzle, and show filling status.
11. Automatic 8 Nozzles Gear Pump Liquid Filler has a PLC control system with an HMI touch panel for easy control.
12. Automatic 8 Nozzles Gear Pump Liquid Filler is equipped with a

gear pump for liquids with different viscosities.
13. Special design reduces foaming and splashing.
14. Automatic 8 Nozzles Gear Pump Liquid Filler has a safety protective shield for the operators' safety
15. Automatic 8 Nozzles Gear Pump Liquid Filler is equipped with a production warning system
16. Equipped with gates for precise positioning
17. Fixed columns with a wheeled frame, easy to move
18. 200L tank
19. Automatic 8 Nozzles Gear Pump Liquid Filler is equipped with an emergency stop button
20. Heavy-duty and rigid construction: Made of SUS #304,316 stainless steel and aluminum alloy.

Specification

- **Number of Nozzles**： 8 Nozzles
- **Automation Level**： Fully automated
- **Suitable Liquids**： Free-flowing, under 40 degrees Celsius
- **Filling Range**：50~5000ml
- **Filling Speed**：50~250ml/sec
- **Filling Precision**：±0.5%~1%
- **Suitable Containers**： All types
- **Power Supply**：220 VAC, 50/60 Hz, 3 phase
- **Machine Weight**：500kg
- **Machine Dimension**：(L)4400mm (W)1900mm (H)2150mm
- ***Actual machine specifications may vary**

Option Accessories

- Infeed / Outfeed turntable.
- Anti-dust protective case.
- Automatic pneumatic shut-off nozzle (Air required)
- Customized stainless steel source hopper
- PLC & HMI control system
- Diving nozzles

Categories: Filling Machine, Liquid Filling Machine

AUTOMATIC BOTTLE FILLING MACHINE

SKU: FG5650

Automatic bottle filling machine with a 12-head automatic liquid filling machine, filling machine capacity can be customized to suit production speed.

This bottling filling machine can be used for bottling juices, oils filling line, honey, food products, pharmacy syrups, filling line, foamy liquids filling line, toilet cleaner filler, chemicals, and any free-flowing flowing low to medium viscous liquids.

Automatic Bottle Filling Machine is suitable for free-flowing liquids like oil, beverages, lotion, and sauce. It can be applied to a wide range of industries, including cosmetics, chemicals, pharmaceuticals, food and beverages, with high capacity, accuracy, and stability, quick and easy changeover to save operation time, equipped with anti-dust and hygiene concern housing for option.

Features

1. Automatic Bottle Filling Machine is built with anti-dust housing, hygiene is a concern.
2. Automatic Bottle Filling Machine's filling nozzles can be customized for quantity and filling method to meet production requirements.
3. Automatic Bottle Filling Machine has advanced valves that prevent liquid from dripping down.
4. Drip tray setting, surplus liquid backflow, no waste.
5. Adopted a servo motor and gear pump, filling precisely and quickly.
6. User-friendly system, simple to use.
7. No bottle, no fill sensor.
8. Color touch screen and PLC controlled.
9. Program recipe storage for simple and quick changeovers.
10. Precise sensor detected, no bottle, no fill.
11. Start, emergency stop, and speed controller configuration.
12. Multiple filling and conveying speeds for accurate control of production.
13. Automatic Bottle Filling Machine has automatic pneumatic gates for bottle entry and exit.
14. Automatic Bottle Filling Machine has a sturdy conveyor.
15. Conveyor guide rail can be adjusted to accommodate any size of bottles.
16. Automatic Bottle Filling Machine is built with mobility castors, enabling easy movement.
17. Heavy-duty steel, easy-to-maintain.
18. Compliance with GMP standard, made of SUS304 stainless steel and anodized aluminum.

Specification

- **Specialty product**: Foamy Product
- **Filling speed**: Up to 250ml/sec
- **Filling range**: Up to 4000ml
- **Filling accuracy**: ±0.5%
- **Machine dimension**: (L) 2800mm(W) 1500mm(H) 2400mm
- **Machine weight**：410 KG
- **Power supply**：110/220VAC, 50/60HZ, Single phase
- **Air pressure requirement**：90 PSI/3 CFM

Option Accessories

- Bottle feeding turntable

Categories: Liquid Filling Machine, Filling Machine

AUTOMATIC GEAR PUMP LIQUID FILLER

SKU: FG4250

Automatic Gear Pump Liquid Filler FG4250 is suitable for various low-viscosity liquids, such as lotion, syrup, cleanser, etc. No adjustment is required as changing products and discharging a vast volume to achieve high productivity with excellent accuracy.

Features

1. The number of filling nozzles can be customized
2. No bottle, no fill.
3. Dipping nozzles can prevent spillage and diminish bubbles.
4. Automatic Gear Pump Liquid Filler has some gear pumps that fill simultaneously to achieve high accuracy at high speed.
5. Automatic Gear Pump Liquid Filler is equipped with a bottle index system to ensure precise filling position.
6. Automatic Gear Pump Liquid Filler is controlled by a PLC control system with a colorful touch screen.
7. Automatic Gear Pump Liquid Filler has a pneumatic shut-off nozzle that prevents liquid from dripping down.
8. Automatic Gear Pump Liquid Filler is equipped with an emergency button.
9. Automatic Gear Pump Liquid Filler is made of corrosion-resistant stainless steel to meet cGMP standards.
10. Automatic Gear Pump Liquid Filler has an accumulated tray underneath the nozzles.
11. Automatic Gear Pump Liquid Filler can be connected with a production line or work independently.

Specification

- **Filling range**: 50~4000ml
- **Filling speed:** 50~250 ml/ sec, 20~40 bottles/min
- **Accuracy**: ± 1%
- **Power supply**: 220VAC, single phase
- **Machine size**: (L)1800mm (W)1050mm (H)1800mm

Option Accessories

- Bottle feeding turntable

Categories: Filling Machine, Liquid Filling Machine

QUICK 3PL
LOGISTICS SIMPLIFIED

EDIBLE OIL FILLING PACKAGING MACHINE

SKU: N/A

Edible Oil Filling Packaging Machine

Edible oil is all around our world. Most of the common edible oils are vegetable oils and are in liquid form. They are usually made from oil-rich crops and seeds, including cocoa butter, palm oil, peanut oil, olive oil and coconut oil, sesame oil, soybean oil, canola oil, linseed seed oil, tea-seed oil, grape seed oil, corn oil (corn germ oil), etc., animal oils include lard, roast duck oil, tallow, cod liver oil, chicken oil, squalene oil, fish oil, shortening, etc.

Nowadays, whether it is street vendors, eateries, or restaurants, the demand for edible oil is becoming increasingly diversified. As a result, the demand for edible oil continues to increase, and the manufacturing supplier keeps up with the changing needs of consumers while maintaining the hygiene of the products. As a result, more manual labor is needed for the product packaging.

We offer you more choices of bottling packaging solutions, and many of the new bottle packaging models can be customized with the production line, from bottle in-feeding, oil filling, capping, and labeling, according to customers' actual product requirements. The actual product filling and packaging requirements are designed.

The filling station can adjust the number of filling heads according to the actual production speed demand. The feeding system is added to store the liquid to be filled and ensure that the liquid maintains a certain amount of stock, and maintains the liquid filling accuracy.

The cap tightening system can be equipped with an automatic cap feeding mechanism. Whether it is a cap with inner cap or with a round pull ring, a safety cover or a general outer screw cap, we will design and customize the exclusive machine for the product.

If there is a demand for an automated production line, it can adopt a robotic-arm pick and place system to accurately pick the cap on the bottle. No matter it's for round or square bottles, 10 liters, 20 liters, or 30 liters, the large volume barrel of oils, we can all provide you with the edible oil of large volume filling packaging solutions.

Time-saving and Easy-to-use Automated Large Volume Edible Oil Filling Packaging Line

Edible oil is one of the nutrients that people need for their daily diet. Therefore, if the automatic filling machine is used in the simple packaging production mode, different sizes of bottle containers are gathered to be put into the feeding tray and then go to the conveyor belt. Then the filling machine assists in dividing the bottles into small

packages and large packages.

Generally, the Edible oil Filling Packaging machine adopts an overflow filler type, which can maintain the same liquid level in each container after the oil filling is completed, and can also adjust the horizontal surface through the human-machine interface.

Additionally, every machine is produced in a synchronous connection, and the colorful human-machine screen is user-friendly and visualized to simplify complicated operations.

The production capacity for a volume of 20 liters of oil can even reach 3-5 bottles per minute, and the filling capacity ranges from 1 liter to 30 liters. It is very flexible and versatile for filling capacity, while the labeling machine at the rear end adopts the front and back labeling, which can not only meet the needs of small-capacity single-sided labeling, but also meet the requirements of double-sided labeling for large-capacity barrel oil.

Only one person is needed to replenish and collect the product during production, which reduces the labor costs and greatly improves the production efficiency. We'll provide you with customized automated filling packaging solutions for edible oil of different volumes and specifications accordingly.

QUICK 3PL
LOGISTICS SIMPLIFIED

Features

1. The filling range is wide; it's not a problem to fill capacity from 1 liter to 30 liters, which is flexible.
2. With a food-grade pump, don't worry about sanitary concerns, plus four overflow liquid filling heads to ensure that each product stays at the same surface level with high accuracy.
3. Edible oil Filling Packaging machine has a conveyor belt is made of stainless steel, which not only keeps the conveying smooth but also has a bright and clean appearance, taking both internal and external functions into consideration
4. Edible oil Filling Packaging machine is equipped with a 100-liter or more stainless-steel storage tank behind the filling machine to allow customers to place liquids conveniently or to connect their own storage tanks, which shortens the time for reloading repeatedly and keeps the filling pressure simultaneously.
5. The customers can set the liquid surface level according to the filling amount they want, and simply add small accessories to easily change the filling position.
6. The Edible oil Filling Packaging machine adopts two relatively equal labeling heads, which can be converted into single-sided labeling or double-sided labeling according to customer requirements.
7. There is a bottle-blocking mechanism on the conveyor belt, and the bottle blocker device adopts a soft and plastic pad to ensure that each bottle is separated by the same position before labeling, and the precision of the standard is stabilized.

8. Edible oil Filling Packaging machine has a flattening mechanism on the top of the labeler to stabilize the bottle to avoid deviation from the bottle. Reduce the friction of the bottle and maintain the integrity of the container
9. There is a paper-wrapping prompt on each labeling head. At the same time, the label-changing action can be easily completed according to the instructions.
10. The Edible oil Filling Packaging machine adopts a stepper motor, which can stabilize the labeling and meet the capacity requirements
11. The capping machine is equipped with a double-track cap feeding conveyor belt, and the transportation process is smooth and stable.
12. Edible oil Filling Packaging machine uses an automatic positioning cap-feeding system, the inner cap and outer cap can be accurately put into the bottle and tightened.
13. Edible oil Filling Packaging machine uses the robotic-arm method to grab the cap and prevent it from any external friction
14. Edible oil Filling Packaging machine has an advanced sensor detection, no bottle, no filling, no cap, no tightening, and a buzzer is equipped to remind the operator.
15. Edible oil Filling Packaging machine has a cap delivery mechanism is equipped with a large storage space, allowing customers to complete daily production by checking a few times within a day, and preventing excessive manual labor for the production line.
16. There are fixed brackets and moving wheels under all the machines to facilitate the customers' movement of the machines.
17. The Edible oil Filling Packaging machine uses a colorful human machine interface, which makes it easy for the operator to watch and can directly adjust and operate on the touchscreen.
18. Using the production connecting system. When there is a problem with one machine, the other machines will stop at the same time.
19. Edible oil Filling Packaging machine has a dual adjustment mode, which can be controlled by human human-machine interface, and can also be fine-tuned by a handwheel.
20. With the emergency button device, the operator is able to suspend the machine in time to check the condition of the production line.
21. The production line is made of stainless steel 304 material, and the part that comes into contact with food is made of 316 material to ensure sanitation concerns.
22. Edible oil Filling Packaging machine is suitable for all kinds of edible oil filling packaging lines, such as peanut oil, sesame oil, coconut oil, palm oil, olive oil, tea-seed oil, and canola oil.

Specification

- **Applicable product**: Easy foamy liquid or glass container
- **Filling range**: 1-30 Liters
- **Filling speed**: 3-5 BPM (Based on 20L edible oil as testing sample)
- **Filling precision**: ±1%

- **Power supply**: 110 or 220 VAC, 50/60 Hz, Single phase
- **Weight**: 1800 KGS
- **Dimension**: (L) 4202 x (W) 2155 x (H) 2059mm

Option Accessories

- Automatic Bottle Feeding Machine
- Collecting Turntable
- Shrink Labeling Machine

Categories: Liquid Filling Machine, Filling Machine

AUTOMATED CHEMICAL PRODUCTS FILLING CAPPING AND LABELING PACKAGING LINE

SKU: N/A

Automated Chemical Products Filling Capping and Labeling Packaging Line

Usually, it's necessary to consider the chemical properties of the product itself when manufacturing chemical products. Therefore, when selecting the packaging machinery equipment, the material of the packaging machine must also be considered to avoid product quality being affected by chemical liquid corrosion.

Most of the liquids in the chemical industry are acidic and alkaline. To avoid operators directly contacting the liquids during the filling process, we especially customize filling and capping lines for chemical products.

The chemical industry, like most other industries, is unable to predict the market reception in the early stage of development; it usually chooses to test the market demand by a small amount of production. As the sales volume increases, the automated production is taken into consideration to increase production capacity.

To maintain the quality of each product, whether it is the capacity of the bottle filling, or the tightness of the cap or position of the label labelled, it can't be achieved without filler, capper and labeler, these machinery equipment However, it consumes more manual labors and with less production efficiency with single machine operation.

Hence, through integrating machine equipment, the automated chemical liquid filling and capping packaging line not only increases the production capacity but also improves the quality of product packaging as well.

This chemical production line can provide you with customized chemical filling, capping, and labeling equipment according to different characteristics of liquids, bottle size, shapes, material of caps, and labeling types.

With the diversity of products in the market, we can provide a filling and capping machine packaging line that meets the needs of commodity packaging to create maximum value and efficiency for customers.

Chemical Liquids Filling Capping Machine

This Automated Chemical Products Filling Capping and Labeling Packaging Line is customized for the chemical industry and technology industry to meet the needs of a specialized solutions filling packaging line.

Normal chemical industries use automatic filling equipment that considers the material and the chemical properties of liquids, and most of the chemical products use large-capacity packaging way for package to deal with large amounts of industrial usage and reduce the frequency of material replacement.

Therefore, the filling range is from 500 to 5000 ml, which is very suitable for oils of large volume barrels filling and capping packages. It improves the shortcomings of time-consuming and labor-intensive processes for general large-capacity liquid filling. The large-capacity chemical filling packaging line includes:

A: Piston pump filling machine, which is suitable for filling thick liquids, such as cream, essence, nail polish, ink, paints, and detergents.

B: The Automatic capping machine includes an automatic cap feeding machine; manual cap placing is not needed. After the bottle is positioned, the cap will automatically be placed on the bottle and tightened. It is suitable for various sizes of plastic screw caps and with no dropper.

1. The vertical round bottle labeling machine is suitable for the shape of cylindrical bottle containers, which can be adjusted according to the size of the bottle.

QUICK 3PL
LOGISTICS SIMPLIFIED

Features

1. The piston pump filling machine can be used in a wide range of solutions, whether the liquid is thick or flowing. The filler has the feature of being all-purpose for liquid filling.
2. Automated Chemical Products Filling Capping and Labeling Packaging Lineis suitable for large round bottles and barrels for liquid filling. Automated large filling volume machinery equipment speeds up production.
3. With a full-cover filling machine to prevent the filling of food products from dust pollution.
4. The filling machine, automated cap feeding and tightening machine, and labeling machine are integrated into an automatic production line, which can be operated by synchronized systems.
5. With the touch panel human machine interface and PLC operation mode, the user finds it easier to operate and easier to learn.
6. Production requirements are setting the parameter through an automated human-machine interface, and data adjustment settings are easy to understand.
7. Automated Chemical Products Filling Capping and Labeling Packaging Line has an automatic capping device includes the cap storage machine, cap feeding, placing, and tightening device. Multiple functions in one machine to save space and manual labor for placing the caps.
8. Automated Chemical Products Filling Capping and Labeling Packaging Line has a filling and capping mechanism made of stainless steel 304 or 316, which is durable and meets GMP

standards.

9. Large round bottles or barrels from filling, capping to labeling, the vertical conveying device makes bottle conveying smooth and stable, and prevents the bottles from skewing and toppling down.
10. Automated Chemical Products Filling Capping and Labeling Packaging Line's automatic cap feeding mechanism is customized according to the cap size. If there are multiple cap sizes, it can be customized according to the requirements and applied to the original capping machine, improving the broad usage of the capping device.
11. Automated Chemical Products Filling Capping and Labeling Packaging Line is equipped with an emergency stop button to easily operate and control the production process in case the production line has a problem, and prevent the operator from getting injured.
12. The vertical round bottle labeling machine can be used for full wrapping around, 1/2 round labeling, and single-sided labeling.
13. Special alkaline liquids and acidic liquids need to be tested and customized by using specific materials
14. Automatic filling machine connects to the capping machine for line production, and can also run the production with a single machine according to production needs.

Specification

- **Filling range**: 500- 5000ml
- **Filling speed**: 20-25 BPM
- **Adopting pump**: Piston pump
- **Applicable cap**: Plastic Screw caps
- **Applicable bottles**: Round bottle, barrel, and cylinder
- **Power supply**: 110 or 220 VAC, 50/60 Hz, Single phase

Option Accessories

- Clear label sensor
- Date Printer
- Laser Printer
- Bottle In-Feeding Turntable
- Bottle Collecting Turntable

Categories: Liquid Filling Machine, Filling Machine

QUICK 3PL
LOGISTICS SIMPLIFIED

SEMI AUTOMATIC FILLING MACHINE

SEMI-AUTO TABLETOP GEAR PUMP FILLING MACHINE FG1100 (SERVO MODEL)

SKU: FG1100

Semi-auto Tabletop Gear Pump Filling Machine FG1100 is a user-friendly HMI liquid filling machine with a servo motor. It is an advanced and efficient small filling equipment, combining high accuracy and high stability, and designed for liquid dispensing, and representing the highest level of professional small filling machines. The filler is equipped with precise gear pump technology and an AC servo motor, offering unparalleled filling accuracy and an excellent filling speed range.

The most outstanding feature of FG1100 is its high accuracy, with filling speed as high as 250 ml per second. It is applied to low viscosity liquids to improve production efficiency greatly, and is suitable for filling temperatures below 40°C. Many types of liquids can be smoothly filled into containers, meeting the various filling needs of different industries and ensuring the product quality.

If you want a filling machine that is simple to operate, precise, and efficient, our Semi-auto Tabletop Gear Pump Filler (FG1100) is your best choice, a professional small filler specially made for accurate and rapid filling. FG1100 has the following features:

Features:

- **7 Inch Touchscreen Interface; Visualization Operation:** Tap the touchscreen to quickly set and adjust the parameters, such as filling volume, speed, and time. Besides that, it can display the filling status and data, improving the convenience and visualization of the operation.
- **Precise Gear Pump:** There is no need to worry about liquid wastage and leakage; it accurately controls the filling volume and speed to achieve high quality and high efficiency.
- **AC Servo Motor:** The filling speed and volume can be adjusted precisely to meet different filling needs and conditions, which is the reason that FG1100 can provide higher filling accuracy and range.
- **More Elastic Production Configuration:** Free restriction from location and space. You can easily carry the filler and move

around to different places when needed. It provides more flexible production arrangements to laboratories, medium, and small factories with limited spaces.

Besides the above features, FG1100 has another advantage, which its cleaning steps are simple and quick. Cleaning the filler is an important step in liquid dispensing. If you don't clean the machine carefully, there will be a risk of bacterial breeding or mixed ingredients. FG1100 saves your cleaning time. Just follow the 3 steps below to complete the cleaning process smoothly:

- **Prepare a barrel of clean water and remove residual raw materials inside the pipe with the" Speed Filling" function on FG1100.**
- **Remove the liquid contact parts and clean them thoroughly. They are the pump, filling nozzle, and pipes. Please dry the pump completely after cleaning.**
- **If you have different liquids that need to be filled, it is recommended to purchase multiple sets of filling pipes for replacement. This way can avoid the mixing of different products and shorten the downtime of changing products in production.**

FG1100 is a high-precision and high-stability filling machine with a user-friendly HMI. It's the best choice among small fillers that meet precise filling volume and high productivity. The filler is designed and manufactured with a GMP certification standard and meets diverse filling needs of various industries such as food factories, pharmaceutical factories, and chemical plants. Meanwhile, it's also a powerful tool for small-volume, diverse filling and packaging production.

If you want to learn more about FG1100, please contact us, and we will provide you with professional and considerate services.

Advantages:

- **Fast filling speed and versatility: The semi-auto Tabletop Gear Pump Filling Machine**'s fill range is 5~4000ml. The filler can be used for filling and dispensing liquids with high fluidity, low temperature, and low viscosity.
- **Best choice of high accuracy:** Filling accuracy is ±0.5% (depends on the viscosity of liquids)
- **Adjustable speed control: Semi-auto Tabletop Gear Pump Filling Machine's a**djustable speed control can adapt to the needs of different products and containers to improve production flexibility.
- **Visualize Data: Semi-auto Tabletop Gear Pump Filling Machine** provides you with current data during production. The operator is able to get the production process clearly and handle problems in time.

Application & Advantage

Suitable Goods:

Food & Beverages: water, juice (with no pulp), tea, alcoholic beverages, olive oil, sesame oil, canola oil, soy sauce, pulp-free sauces, ketchup, liquid seasonings, etc.
Pharmaceuticals & biotechnology products: Liquid medicines, syrups, injections, biologics, pet injections, nutritional supplement drinks.
Cosmetics & Personal care: Facial mask, lotion, toner, serum, hand wash, shower gel, shampoo, conditioner, mouthwash, and perfume.
Chemicals and agricultural products: Detergent, dishwashing, car shampoo, engine oil, buffer solution, water-based paint, coatings, degreasers, automotive lubricants, alcohol, pet shampoo, laundry detergent, liquid fertilizers, pesticides, organic fertilizers, Brake fluid, coolant.
Vape: FG1100 can be used to fill a vape.

Suitable industry:

Pharmaceutical industry, food industry, biotechnology industry, cosmetics industry, chemical industry, electronics industry, packaging

industry, academic institutes or laboratories, etc.

Suitable container:

Various sizes and materials: plastic bottles, PET bottles, glass bottles, ampoules, metal bottles and jars, pottery, and bagged products (combine with packaging machines as required).

Suitable liquid:

Various liquids with good liquidity and below 40°C

Suitable Container Shape:

Round bottle, square bottle, jar, glass bottle, flat bottle, conical flask, and bottles with a special shape.

Filling Style:

Operation of the Semi-auto Tabletop Gear Pump Filling Machine is simple; please follow the steps below:

- Connect the filling nozzle to the outfeed side of the pump, and put

the nozzle into the bottle.

- Connect the power cable to the Semi-auto Tabletop Gear Pump Filling Machine and turn on the machine. Choose the mode that you're going to use, such as manual mode or automatic mode.
- Set the parameters on the HMI, such as filling volume, filling speed, and filling time. And save the parameters or select saved parameters.
- Press the Start button and start to fill. You can check the filling status and data through HMI at any time.
- After completing the filling, press E.M Stop and turn off the machine. Disassemble the filling component and filling pipe for cleaning.

Semi-auto Tabletop Gear Pump Filling Machine is easy to operate with high accuracy. It saves time and cost, as well as enhances product quality and competitiveness.

Machine Layout:

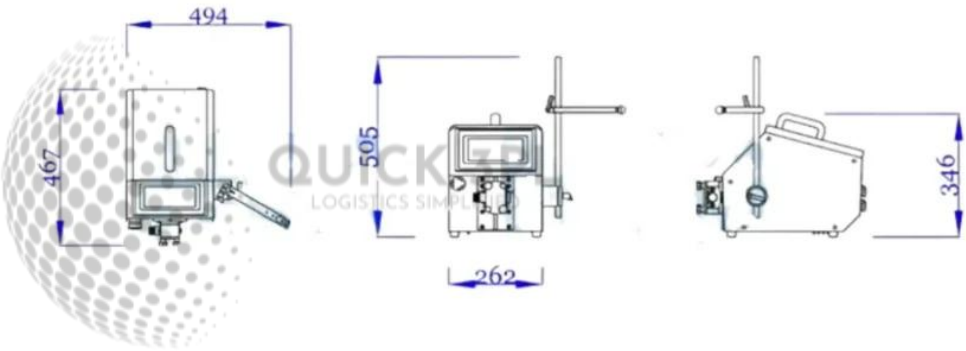

Features

1. High-quality HMI: 7 7-inch colored touchscreen provides visualization and convenience while operating. You can take control of the production situation and the data which displayed on the screen at any time.
2. Semi-auto Tabletop Gear Pump Filling Machine is equipped with an AC servo motor and a PLC control system, providing high-precision and highly stable filling operations for various industries.
3. Allowing to save 100 recipes: One-click saving: You can save production data, including product name, filling volume, speed, and other information, etc., accelerating production conversion.
4. Fast filling speed & wide filling range: Semi-auto Tabletop Gear Pump Filling Machine is suitable for quick dispensing large volume products.
5. Strong suction power, you can directly place the filling pipe into the material barrel to extract liquid.
6. Semi-auto Tabletop Gear Pump Filling Machine uses a touch screen interface to input the filling volume and set the speed directly to ensure the correctness of the parameters.

7. There are 3 operation modes: manual, automatic, and test mode.
8. The advantage of FG1100 lies in its high accuracy, which can ensure that each product reaches the precise capacity. It is very important for various industries such as food factories, pharmaceutical factories, chemical plants, laboratories, etc.
9. The gear pump is driven by a servo motor, so you can precisely adjust the filling volume and its speed.
10. The 2nd speed filling mode prevents liquid splash and reduces foaming when the liquid level is close to the bottle mouth.
11. Ball-valve shut-off nozzle prevents liquid dripping and also follows the safety standard.
12. Shorten cleaning & maintenance time, liquid only passes through the pump and filling pipe, but not the machine.
13. Freestanding filling pump for quick removal and cleaning
14. Semi-auto Tabletop Gear Pump Filling Machine has a highly stable PLC that can avoid environmental disturbance.
15. Customization possibility, you can choose different pumps to match different liquids.
16. Semi-auto Tabletop Gear Pump Filling Machine is designed and manufactured according to the GMP standard, and meets the needs of the food and pharmaceutical industries.
17. The machine shell is made of glossy stainless steel, beautiful and easy to clean.
18. The handle is on the top of the machine, easy to relocate for different production needs.
19. The touch screen interface is available in multiple languages.
20. Semi-auto Tabletop Gear Pump Filling Machine is equipped with the E.M Stop button, which makes the operation safer.
21. The servo motor precisely controls the gear pump system for a consistent filling volume.
22. The sloping machine shell is not easy to accumulate water and dust.

Specification

- **Automation Level**： Semi-auto
- **Filling Type**： Gear Pump
- **Filling Range**： 5~4000ml
- **Filling Speed**: 50- 250ml (depends on the viscosity of liquids)
- **Filling Accuracy**： ±0.5~1% (with 100ml and more; depends on the type of liquids)
- **Applicable Liquid**： liquid with good liquidity and below 40°C
- **Power Supply**： 110 or 220VAC, 50/60Hz, single phase
- **Machine Size**： (L)470mm (W)490mm (H)505mm
- *** Actual product specifications may vary**

Option Accessories

- Stainless Steel Hopper
- Electronic Scale & Weight Filling Mode

- Pneumatic Shut-off Nozzle prevents liquid dripping
- Diving nozzle to reduce foaming
- Integrate with other automated equipment

Categories: Filling Machine, Semi Automatic Filling Machine

ENERGY SAVING RATION LIQUID FILLING MACHINE

SKU: FP2000

1. Energy Saving Ration Liquid Filling Machine is suitable for medium viscosity liquid (such as lotion, oil, and sauce) and liquid under 60 degrees centigrade.
2. Filling stable with high accuracy.
3. Energy Saving Ration Liquid Filling Machine has a compact design, easy to operate.
4. Energy Saving Ration Liquid Filling Machine is pneumatic driven, making it operate more safely and economically.
5. We offer a Piston Filling Machine for the packing of filling products for any kind of liquid. Easy to operate, energy efficient, and cost-effective.

Features

1. Energy Saving Ration Liquid Filling Machine is easy to clean without disassembling the whole machine.
2. Energy Saving Ration Liquid Filling Machine's filling volume can be adjusted by hand wheel easily.
3. Filling material can be replenished directly from a bottle or by a filling tube.
4. Energy Saving Ration Liquid Filling Machine has an advanced valve in the nozzle that prevents liquid from dripping down.
5. Energy Saving Ration Liquid Filling Machine has a protective shield and medical-level silicon tube for qualification to a high standard of hygiene.
6. Energy Saving Ration Liquid Filling Machine is equipped with a movable stand to break space limitations and increase mobility.
7. Energy Saving Ration Liquid Filling Machine is made of SUS#304 stainless steel and aluminum alloy for easy maintenance and longevity to meet cGMP standards.
8. Our control system provides long-term energy-saving results.

Specification

- **Filling Cylinder**：200c.c./ 500c.c./ 1000c.c.
- **Filling range**：5-200ml/ 50-500ml / 100-1000ml
- **Filling speed**：50-150ml/sec
- **Filling accuracy**：±0.5%
- **Air pressure requirement**：6 kgf/cm2

Option Accessories

- Heating source tank
- Pneumatic shut-off nozzle
- Photocell switch

Categories: Semi Automatic Filling Machine, Filling Machine

BIG VOLUME TABLETOP PISTON PUMP LIQUID FILLING MACHINE

SKU: FP1010

Big volume tabletop piston pump liquid filling machine FP1010 is designed for slightly thick materials like normal saline, juice, oil, eye drops, body lotion, julep, makeup remover, essential oil, skin moisturizer, UP protective fluid, sun block, mouthwash, bathroom cleanser, functional drink, alcoholic product, chemicals and organic fertilizer etc.

Features

1. Semi-automatic filler, ease of operation.
2. Big Volume Tabletop Piston Pump Liquid Filling Machine can fill consecutively or fill with an interval time.
3. Big Volume Tabletop Piston Pump Liquid Filling Machine's filling volume, filling speed, and suction speed can be adjusted by hand wheel easily.
4. Big Volume Tabletop Piston Pump Liquid Filling Machine is activated by a foot pedal (option).
5. Big Volume Tabletop Piston Pump Liquid Filling Machine has a ball-valve shut-off nozzle that prevents liquid from dripping down.
6. Big Volume Tabletop Piston Pump Liquid Filling Machine is known for easy disassembly and cleaning.
7. Big Volume Tabletop Piston Pump Liquid Filling Machine is corrosion-resistant material for the chemical industry and cleansing products.
8. Big Volume Tabletop Piston Pump Liquid Filling Machine is made of stainless steel and, suits for a humid environment.
9. Big Volume Tabletop Piston Pump Liquid Filling Machine has a compact design to save more room
10. Big Volume Tabletop Piston Pump Liquid Filling Machine is equipped with an emergency stop button for safety concerns.

Specification

- **Filling volume**: 100~1000ml
- **Filling speed**: 30~150 ml/sec (depends on the different viscosities of the liquid)
- **Filling accuracy**: ± 0.5%
- **Air pressure requirement**: 6 kgf/cm2
- **Dimension**:(L)1200mm (W)300mm (H)315mm

Option Accessories

- Heating source tank
- Pneumatic shut-off nozzle
- Photocell switch

Categories: Filling Machine, Semi Automatic Filling Machine

TABLETOP PISTON PUMP LIQUID FILLING MACHINE

SKU: FP1005

Tabletop Piston Pump Liquid Filling Machine is available for products like cleanser, dishwashing liquid, cream, honey, hair conditioner, body lotion, pastes, alcoholic products, syrup, slightly thick sauce, oil, and chemicals, etc.

Features

1. Semi-automatic filler, ease of operation.
2. Tabletop Piston Pump Liquid Filling Machine is suitable for warm liquid (under 60 degrees) and viscous liquid, such as oil, lotion, shampoo, syrup, and alcoholic liquid.
3. Tabletop Piston Pump Liquid Filling Machine can fill consecutively or fill with an interval time.
4. Tabletop Piston Pump Liquid Filling Machine's filling height can be adjusted by hand wheel for different bottles.
5. Tabletop Piston Pump Liquid Filling Machine's filling volume, filling speed, and suction speed can be adjusted by hand wheel easily.
6. Tabletop Piston Pump Liquid Filling Machine is activated by a foot pedal (option).
7. Tabletop Piston Pump Liquid Filling Machine has a ball-valve shut-off nozzle that prevents liquid from dripping down.
8. Tabletop Piston Pump Liquid Filling Machine is known for easy disassembly and cleaning.
9. Tabletop Piston Pump Liquid Filling Machine is corrosion-resistant material for the chemical industry and cleansing products.
10. Tabletop Piston Pump Liquid Filling Machine is made of stainless steel and is suitable for a humid environment.
11. Compact design to save more room.
12. Tabletop Piston Pump Liquid Filling Machine is equipped with an emergency stop button for safety concerns.

Specification

- **Filling volume**: 50~500ml
- **Filling speed**: 30~150 ml/sec (depends on the different viscosities of the liquid)
- **Filling accuracy**: ± 0.5%
- **Air pressure requirement**: 6 kgf/cm2
- **Dimension**: (L)1100mm (W)290mm (H)310mm

Option Accessories

- Heating source tank
- Pneumatic shut-off nozzle
- Photocell switch

Categories: Semi Automatic Filling Machine, Filling Machine

TABLETOP PISTON FILLING MACHINE

SKU: FP1002

Tabletop piston filling machine FP1002 is suitable for small filling volume requirements. The cylinder filling module ensures precise filling volume and prevents liquid from dripping down. Besides, filling volume, filling speed, and suction speed can be adjusted by hand wheel easily. No electricity is needed, especially for alcoholic liquids.

Features

1. Tabletop piston filling machine, ease of operation.
2. The tabletop piston filling machine is suitable for warm liquid (under 60 degrees) and viscous liquid, such as oil, lotion, shampoo, syrup, and alcoholic liquid.
3. The tabletop piston filling machine can fill consecutively or fill with an interval time.
4. The tabletop piston filling machine's filling height can be adjusted by hand wheel for different bottles.
5. Tabletop piston filling machine's filling volume, filling speed, and suction speed can be adjusted by hand wheel easily.
6. The tabletop piston filling machine is activated by a foot pedal (option).
7. The tabletop piston filling machine has a ball-valve shut-off nozzle that prevents liquid from dripping down.
8. The tabletop piston filling machine is known for easy disassembly and cleaning.
9. The tabletop piston filling machine is corrosion-resistant material for the chemical industry and cleansing products.
10. Tabletop piston filling machine made of stainless steel and suitable for a humid environment.
11. Tabletop piston filling machine has a compact design to save more room
12. The tabletop piston filling machine is equipped with an emergency stop button for safety concerns.

Specification

- **Filling volume**: 5~200ml
- **Filling speed**: 30~150 ml/sec (depends on the different viscosities of the liquid)
- **Filling accuracy**: ± 0.5%
- **Air pressure requirement**: 6 kgf/ cm2
- **Dimension**: (L)1000mm (W)295mm (H)300mm

Option Accessories

- Customized cylindraceous reservoir
- Heating source tank
- Pneumatic shut-off nozzle
- Photocell switch
- Dipping nozzle

Categories: Semi Automatic Filling Machine, Filling Machine

TABLETOP OVERFLOW FILLER

SKU: FL1100

Tabletop overflow filler is best suited for liquids with low to medium viscosity. The desired product to be filled is held in a stainless steel reservoir, then pumped into a manifold to disperse the product to each of your filling nozzles. When the container fills up to the target fill height, the excess product and foam are forced out of the container via the return side to the original product source tank. The unique overflow filling nozzles allow for each bottle or container to be filled to the same level, allowing for an aesthetically pleasing shelf appeal for clear containers.

Tabletop overflow filler is suitable for free-flowing liquids such as water, juice, syrups, alcoholic beverages, shampoos, foamy cleansers and chemicals, and other non-carbonated aqueous beverages. It is especially suited for foamy liquids. High performance, easy to clean, easy to operate, expandable at low cost. Offers the greatest flexibility at the lowest cost.

Tabletop Overflow Filler is manufactured with a heavy-duty 304 stainless steel, tig-welded frame and is available with 2 filler heads. Stainless steel Filling Heads, and Product Supply Pump, plus many more features.

QUICK 3PL
LOGISTICS SIMPLIFIED

Features

1. Compact design, easy to operate, space-saving, and high mobility.
2. Duel nozzles, efficient filling.
3. Filling volume is adjustable, diversifying the production line.
4. Diving nozzles prevent foam from forming and spillage.
5. Fill level consistency, an idea of transparent glass bottles filling.
6. Tabletop Overflow Filler is suitable for liquids with good liquidity.
7. Heavy-duty construction for longevity.
8. Overflow liquid back to the tank, avoid waste.
9. The bottle height and bottle positioning adjuster make it easy to change bottles.
10. Tabletop Overflow Filler is easy to clean without disassembling the whole machine.
11. Filling speed and volume are adjustable to meet a variety of production.
12. SUS#304 stainless steel and aluminum alloy frame construction.
13. One-way valve to keep heads full of product between filling cycles.

Specification

- **Filling range**: 5-5000 ml

- **Filling speed**: 50-250 ml/sec
- **Filling accuracy**: ±0.5 %
- **Power supply**: 110/200 VAC, single phase

Option Accessories

- capping machine
- date coding machine

Categories: Semi Automatic Filling Machine, Filling Machine

QUICK 3PL
LOGISTICS SIMPLIFIED

ADVANCED TABLETOP GEAR PUMP LIQUID FILLER

SKU: FG1050

Tabletop Gear Pump Liquid Filler is a versatile filling machine, and there is no need to buy any additional hopper. Because of the compact design of the tabletop liquid filling machine, it's incredibly suitable for limited space, and can be used in a small place.

The suitable filling range is from 50 ml to 4000ml, and can be applied to flowable liquid no hotter than 50 degrees Celsius, such as tea, beverage, juice, essential oil, water, oral solution, potion, edible oil, dish washer and the products from many kinds of industry, such as food, bio-pharma, cosmetic, and chemical.

Advanced Tabletop Gear Pump Liquid Filler is a small-scale filling machine that is suitable for various kinds of filling volumes and different kinds of liquid products. The Tabletop Gear Pump Liquid Filler is equipped with an advanced touch screen human-machine interface that not only allows the operator to adjust the filling volume, filling speed, and filling time, but also makes the filling machine more productive because there is no need to do mechanical adjustments.

Gear Pump Liquid Filler Machine That Is Suitable For Many Kinds Of Small-To-Medium Scale Filling Production

Advanced Tabletop Gear Pump Liquid Filler can be operated by a single operator, and there is no need to purchase another hopper. All the operator needs to do is put the in-feed tube into the source tank, and the filling machine will draw the liquid itself, which could save the wasted time on refilling the hopper. There will be no contact between the tabletop filling machine and the liquid, so the cleaning and maintenance are easy and time-saving.

The compact semi-automatic filling machine has many kinds of filling tubes that could be chosen according to your liquid's properties. With the food/ pharma grade filling tube, the sanitary requirement can be fulfilled without a doubt. Also, the economic tabletop filling machine has a connection that could be integrated into a capper/ labeling machine, becoming a compact filling-capping-labeling production line according to your needs.

Features

1. The Tabletop Gear Pump Liquid Filler could be operated by a single operator, and it provides a high-efficiency/high-accuracy filling process.
2. The gear pump with high filling accuracy.

3. An optional high-temperature resistant, plasticizer-free filling tube suitable for high-temperature liquid filling.
4. The shut-off ball valve would prevent the liquid from dripping and keep the product clean and beautiful.
5. Tabletop Gear Pump Liquid Filler has a PLC-controlled system providing a simple operating interface.
6. With digital parameter input/ setting, there is no need to make physical adjustments.
7. Two kinds of filling mode: filling from the source tank or the optional hopper.
8. There will be no contact between the filling machine and the liquid, so the cleaning and maintenance are easy and time-saving.
9. Tabletop Gear Pump Liquid Filler has a stainless steel base frame that meets the cGMP standard.
10. The filling control system is stable and endurable.
11. The filling operating mode could be switched depending on your need: manual/ automatic/ foot pedal.
12. The Tabletop Gear Pump Liquid Filler could be easily rearranged to another place, which provides high mobility and high convenience.
13. Tabletop Gear Pump Liquid Filler can be applied to flowable, under 50 degrees Celsius liquid, such as juice, potion, shampoo, and motor oil.
14. Wide-range application, making the filling machine more economical.
15. Tabletop Gear Pump Liquid Filler shortens the filling time and manpower requirement.
16. The instrument meets the cGMP requirements and is suitable for chemical, pharmaceutical, food, cosmetic, and biotech industries.

Specification

- **Product type**： Tabletop liquid filling machine
- **Model**： FG1050
- **Industries**： Beverage, pharma, chemical, biotech, cosmetic
- **Package**： Bottle, pouch, Pouches in various shapes and sizes
- **Packaging material**： Glass, plastic, aluminum, iron can.
- **Filling range**：50-4000 ml
- **Filling speed:** 50- 250 ml/sec
- **Filling accuracy**：0.5- 1%
- **Machine weight:** 17 kg.
- **Power supply**：110V/220V, 50/60 Hz, single phase
- **Dimension**：(L) 480mm (W) 310mm (H) 270mm
- **Manufacture in**： Taiwan
- **MOQ 1**：set
- **Customization**： According to the liquid property
- **Warranty**： One year

Option Accessories

- 3.5 L stainless steel hopper (customizable)
- 10-30 L hopper, 6 mm/ 8 mm filling diameter.
- Automatically pneumatic shut-off valve.
- Diving filling nozzle
- Foot penal
- Photoelectric switches
- Easy assembling connector

Categories: Semi Automatic Filling Machine, Filling Machine

TABLETOP GEAR PUMP LIQUID FILLING MACHINE (TABLETOP FILLING MACHINE)

SKU: FG1000

Tabletop gear pump liquid filling machine is equipped with an accurate gear pump, which could provide a high-speed filling mode. The tabletop gear pump liquid filling machine is designed for limited production space. The compact machine design does not need too much room, and with its simple installation and easy operating mode, the required time for production is shortened.

What makes this filling machine more efficient is that it could be easily applied to many kinds of liquids in different filling volumes if the liquid is flowable and is not higher than 50 degrees Celsius, such as lotion, toner, cleansing oil, lotion, shampoo, olive oil, detergent, etc. The filling tube is made of food/ pharmaceutical grade materials, which can be put into the hopper you already have, and no need to buy another one.

How To Use A Single Tabletop Gear Pump Liquid Filling Machine To Produce Different Products?

The operators can easily operate and adjust the Tabletop Gear Pump Liquid Filling Machine via the microcomputer digital dial button, and the filling volume, filling speed, and operating time are all adjustable. Just put the filling tube into your hopper and turn on the power, and the filling machine will start production. The only thing you need to do for a product changeover is to adjust the settings and begin batch production.

The Tabletop Gear Pump Liquid Filling Machine parts and your liquid won't have any contact, so the buyers don't need to worry about contamination. Also, this machine could be applied to more than one kind of liquid. All you need to do to handle these liquids is use the proper filling tube, which is easy to clean and replace, and a high-standard sanitary one. It's the best tabletop filling solution for small volume and small batch production.

Features

1. Tabletop Gear Pump Liquid Filling Machine is equipped with a liquid shut-off device, which prevents dripping and keeps the machine clean.
2. The tabletop gear pump filling machine provides high filling speed and high filling accuracy.
3. Tabletop Gear Pump Liquid Filling Machine has a microcomputer digital control panel makes the machine easy to set and simple to operate.

4. All filling speed, filling volume, and filling interval time are adjustable.
5. The food-grade filling tube could be placed into the tank directly, or we also have an optional hopper available.
6. CE-certified machine with more reliability.
7. Tabletop Gear Pump Liquid Filling Machine is constructed with stainless steel, which meets the cGMP requirement.
8. Food/ Pharmaceutical class filling tube, providing easy cleanness and quick product changeover.
9. Compact semi-automatic liquid filling machine for limited space.
10. Switchable filling mode available: manual/ automatic/ foot-panel.
11. Tabletop Gear Pump Liquid Filling Machine is suitable for flowable liquids, have low viscosity and low-to-medium temperatures.
12. The filling time could be set as interval filling or continuous filling.
13. The operator could control the production by using the foot panel.
14. Different kinds of filling tubes are available to meet the buyer's requirements.

Specification

- **Product type**： Semi-automatic liquid filling machine
- **Model**： FG1000
- **Industries**： Food, Chemical, Pharma, Biotech, Cosmetic
- **Power supply**：110V/220V, 50/60 Hz, single phase
- **Apply to**: Bottles/ Bags/ Pouches in various shapes and sizes
- **Packaging material**：Glass and plastic
- **Filling range**：50-4000 ml
- **Filling speed**: 50- 250 ml/sec
- **Filling accuracy**：0.5- 1%
- **Machine weight**: 17 kg.
- **Dimension**：(L) 480mm (W) 310mm (H) 270mm
- **Manufacture in**： Taiwan
- **MOQ 1**：set
- Customization: According to the liquid property
- **Warranty**: One year

Categories: Filling Machine, Semi Automatic Filling Machine

SEMI-AUTOMATIC PISTON PUMP FILLING MACHINE

SKU: FP2100

Semi-automatic piston pump filling machine is the common design of the piston filler. Neostarpack is extremely experienced in manufacturing tabletop filling machines, and we reduce the space requirement of the standalone piston pump filling machine by using the basic standalone machine module.

The whole machine only needs an A3 area, which is only the 1/3 of the tabletop filling machine, extremely suitable for the limited space. It's a convenient liquid filling instrument for small to medium-scale production. The piston pump liquid filling machine with the liquid quick release design, and its mechanical filling design makes it more accurate, also meets the requirements for filling different kinds of liquids.

Semi-Automatic Piston Pump Filling Machine can be applied to both bottled products and bagged products, and it could easily handle different kinds of bottle materials and bottle shapes. The piston pump filling machine is compatible with liquids from low to high viscosity in food, cosmetic, chemistry, and biotech industries, such as soy sauce, paste, sauce, oil, cosmetic products, beverages, shampoo, detergent, etc.

Semi-Automatic Piston Pump Filling Machine Advantage

1. Comply with cGMP, the pharmaceutical manufacturing specification. Use SUS316 or 316L corrosion-resistant stainless steel.
2. Comply with food manufacturing specifications, use sanitary protective cover, and a qualified sanitary filling tube.
3. The filling quality is excellent, and the filling liquid does not drip. Maintain the hygiene and product quality.
4. Semi-Automatic Piston Pump Filling Machine is the most suitable filling machine for small or medium production.

Application & Advantage

Semi-Automatic Piston Pump Filling Machine can increase the whole line's production efficiency

Semi-Automatic Piston Pump Filling Machine with its hopper settled right on the filling cylinder, which makes the filling process quick and accurate. The height of the hopper is designed properly to ensure it's in the best working area. Also, the piston pump filler itself is designed for comfortable working by allowing the operators could sit down when

production is going. The easy assembling cylinder design makes it easy to maintain and clean the machine. Unlike the common piston pump filling machine and its heavy, huge, and inconvenient body, Neostarpack semi-automatic piston pump filling machine, with its movable wheel, can increase the whole line production efficiency.

Piston pump filler suitable for:

Alcohol, oil, lotion, sauce, oral liquid, essential oil, edible oil, beverage, soy milk, motor oil, etc.

Package

PET bottle, glass bottles, aluminum can, metal can, aluminum bag, plastic bag, etc.

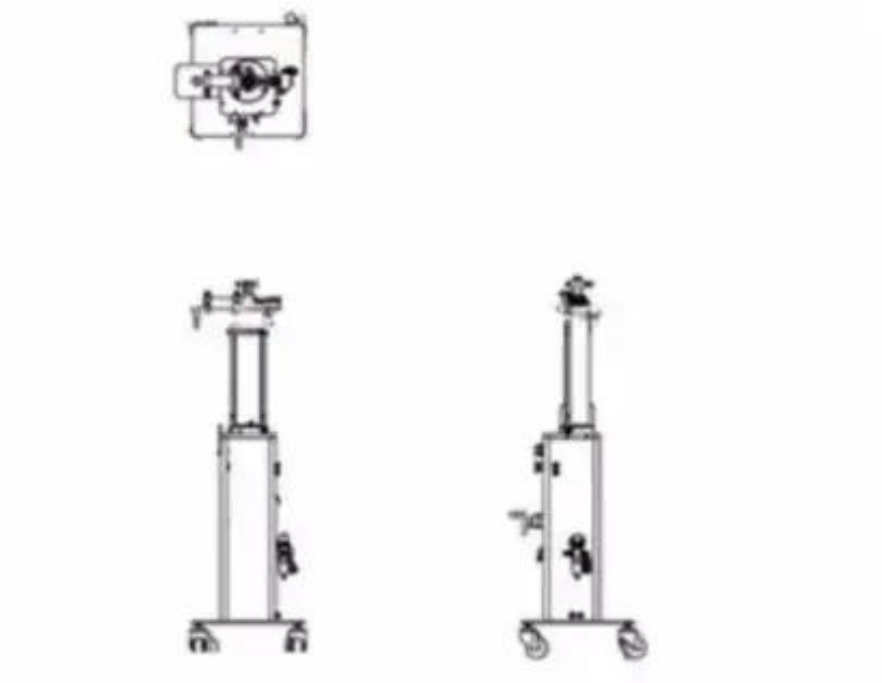

FP2100

Semi-Automatic Piston Pump Filling Machine FP2100

This picture shows a 1000ml filling machine without a hopper, and there is also a 500ml type. It can be customized. Welcome to inquire.

Features

1. The filling volume of the piston pump filling machine is adjustable according to your product and requirements.
2. Sanitary grade pump provides an accurate filling procedure.
3. Independent, easy-assembling piston cylinder allows quick maintenance and changeover.
4. A foot switch is available, providing a controllable interval time.
5. Semi-Automatic Piston Pump Filling Machine with high space efficiency, suitable for limited space.
6. Semi-automatic filling machine ergonomics design made it possible to have high efficiency and a comfortable working environment at the same time.
7. Moveable base design with wheel, easy re-arrangement according to your production requirement.
8. Semi-Automatic Piston Pump Filling Machine is suitable for bottled products and bagged products.

9. Piston pump filler can be applied to high viscosity liquids (10000 cps)
10. Semi-Automatic Piston Pump Filling Machine is equipped with a hand wheel for easy volume adjustment, also easy to operate.
11. Mechanical filling design made it more accurate
12. Semi-Automatic Piston Pump Filling Machine is made of stainless steel, which meets the cGMP requirement.

Specification

- **Filling range**: 100- 1000ml
- **Filling speed**: 30-150 ml/sec (depends on the liquid viscosity)
- **Hopper**: 10-20 L available
- **Dimension**: (L) 350mm (W) 350mm (H) 1700mm
- **Power Supply**: 110/220V, single phase.
- **Filling Accuracy**: ±1%
- **Air supply**: 6 kgf/cm2
- **Weight**: 60kg

Option Accessories

- Customized Hopper (sanitary grade or stainless-steel hopper): extra volume
- Heating hopper (under 60 degrees).
- Automatic check valve
- Automatic shut-off value
- Anti-foaming filling nozzles
- Air compressor
- Photoelectric start switches

Categories: Filling Machine, Semi Automatic Filling Machine

TWO-NOZZLE BOTTLE FILLER

SKU: FG2100

Two-nozzle bottle filler

When one tabletop liquid filling machine is not enough to meet market needs, we always suggest that our customers buy one more from us to increase productivity. But when we visit our customers' factories, we often see that the operator can only use one filling machine at a time. What if we designed a new type of two-nozzle filling machine to solve this problem?

We care about the smoothness of producing progress, so we designed a 2-nozzle gear pump filling machine. It has a working table and is capable of holding two products at the same time. After you fill products on the right-hand side of this filling machine, you can do capping and labeling on the working table in the middle, and then you can pack them on the left-hand side.

We believe this double-nozzle bottle filling machine can give customers space for doing other things, like capping and labeling. If you want a label applicator, you may buy it and put it on the working table to help you do labeling. The platform for putting the carton on the left-hand side may come off if you don't need it. It's possible to become a complete semi-automatic production line with this machine if you buy a capping machine and a labeling machine from us. The operation of the double-nozzle bottle filling machine is simple. All you need to do is set up parameters, turn to semi-auto mode or automatic mode, then step on the foot pedal or press the start button.

Features

1. The two-nozzle design doubles the speed.
2. Gear pumps are positioned beneath a working table.
3. Achieve high speed and accuracy.
4. Its shut-off nozzle design prevents liquid dripping.
5. Make speed, volume, and interval time easily adjustable.
6. Multiple filling modes, test/manual/automatic, make it easy to maneuver.
7. Two-nozzle bottle filler comes with a convenient foot pedal.
8. Two-nozzle bottle filler's entire frame is made of SUS#304 that meets the cGMP standard.
9. Nozzles and all critical parts are made of SUS#316.
10. Two-nozzle bottle filler is equipped with an Emergency stop button to enhance safe handling.

Specification

- **Filling range**: 5-4000ml
- **Filling speed**: 50- 250ml/sec
- **Filling accuracy**: ±0.5%~1%
- (Subject to Liquid Type and Filling Speed)
- **Power supply**: 110 or 220VAC; single phase
- **Machine dimension**: (L)1550mm(W)400mm(H) 1300mm

Option Accessories

- Automatic pneumatic shut-off nozzle
- Customized stainless steel source hopper
- PLC & HMI control system

Categories: Semi Automatic Filling Machine, Filling Machine

TABLETOP PERISTALTIC PUMP LIQUID FILLING MACHINE

SKU: FT1000

Tabletop Peristaltic Pump Liquid Filling Machine FT1000 features precise, hygienic filling and is suitable for industries such as biotechnology, food, chemical, and medical, as it allows for filling with no chance of contamination. It's lightweight and portable, takes up little production space, and is perfect for those who are starting to move into automatic production, those who do not have a lot of extra production space, or those who would like a backup machine to support an existing production line.

The interface allows up to 20 recipes to be saved at once, for those who are constantly switching products, and also allows the operator to keep track of production levels. Only one operator is needed during production, which frees up valuable manpower to focus on other tasks.

The one-tube feature of this Tabletop Peristaltic Pump Liquid Filling Machine allows the user to switch between production lines without fear of cross-contamination. The liquid does not leave the tube at all during the filling process, saving time and energy that can be spent more productively.

For products that may need to be filled in a sterile environment or those that may have chemical reactions to the metal innards of a typical filling machine, this will reduce all sorts of unwanted exposures and possible hazards.

For products where isolation and sterilization are not high priorities, the Tabletop Peristaltic Pump Liquid Filling Machine can still help save cleaning time, as there is no need to clean the machine's main body. Only the tube needs to be cleaned, and a different tube can be assigned to each product, so that product switching can be done just by putting the assigned tube onto the machine.

So, for our consumers who need to switch between three or more products, or have high hygiene standards, we recommend the Tabletop Peristaltic Pump Liquid Filling Machine for your filling needs.

Advantages

1. Steady and precise filling by the peristaltic pump.
   2. Single tube means that there is no possibility of cross-contamination, as well as easy production switching.
   3. No additional parts or tools needed to change production.
   4. Meets the cGMP Guidelines for Good Manufacturing Practice for

Medicinal Products.
5. Can be used with a capper and labeler to create a semi-automatic production line.

Application & Advantage

Suitable for:

Syrups, sauces, oils, yogurts, juices, glues, chemicals, alcohols, creams, shampoos, detergents, pastes, serums, concentrates, extracts, nail polishes, pigments, varnishes, slurries, resins, inks, purees.

Suitable fields

Pharmaceuticals, biotechnology, dietary supplements, cosmetics, food and beverages, laboratories, and hospitals.

Q & A

Q: Can fillings with solid chunks be used with the Tabletop Peristaltic Pump Liquid Filling Machine?

A: It is not recommended. For solid/liquid mixes, we recommend taking a look at the FP line, which can fill those kinds of liquids.

Q: What's the difference between the FT1000 and FG1000?

A: Visually, they appear very similar to each other. The most crucial

difference is in the way they pump liquids. The FG1000 uses a gear pump, which means that the infeed and outfeed tubes are connected to the gear pump in the front. As the liquid passes through the gear pump, it is pushed towards the outfeed tube. The FT1000, on the other hand, features one unbroken tube that goes from infeed to outfeed. The peristaltic pump massages the tube to force the liquid to pump through. The FG1000 is can fill continuously, while the FT1000 fills in cycles and is suitable for products that need to be filled in a sterile environment.

FP1002

FG1000

QUICK 3PL
LOGISTICS SIMPLIFIED

Features

1. Tabletop Peristaltic Pump Liquid Filling Machine features a humanized digital control interface, adjustable filling volumes, speed, and intervals for easy adjustments
2. User-friendly PLC program, making operation fast and easy.
3. Semi-automatic operation means that the machine has no complicated parameter settings; it's easy to use even for first-time operators.
4. Tabletop Peristaltic Pump Liquid Filling Machine is equipped with food-grade silicon filling tubes, meeting the highest sanitary requirements.The
5. Tabletop Peristaltic Pump Liquid Filling Machine has an emergency stop button to protect the safety of operators.
6. Liquids run through switchable tubes only, providing easy clean up without the need for disassembling the machine itself.
7. Adjustable filling volume, speed, and interval time provide high filling flexibility. Connectable to a foot pedal; can be operated either by hand or foot.
8. Switchable filling tubes. Each can work with one kind of liquid, eliminating the possibility of cross-contamination.
9. Solid-body design provides high stability and durability.
10. Small in size, providing space efficiency and mobility.

11. The tabletop peristaltic pump filling machine FT1000 works best with liquids under 60 degrees Celsius.
12. Tabletop Peristaltic Pump Liquid Filling Machine is made of SUS 316 stainless steel, meeting the cGMP level sanitary requirement.

Specification

- **Filling range**: 5~500ml
- **Filling speed**: 5- 50ml/sec
- **Filling accuracy**: ±0.5%~1%
- **Power supply**: 110 or 220VAC; 50Hz/60Hz; single phase
- **Machine dimension** : (L)459.7mm(W)493.4mm(H)419.1mm

Option Accessories

- Automatic pneumatic shut-off valve.
- Diving filling nozzle
- Customized stainless steel hopper
- Electrical scale

Categories: Filling Machine, Semi Automatic Filling Machine

QUICK 3PL
LOGISTICS SIMPLIFIED

COMPACT FILLING LINE (FILLER/CAPPER/LABELER)

SKU: N/A

Compact Filling Line (Filler/Capper/Labeler) is the best solution for an automatic filling line for flexible, small-scale production. Integrating a feeding turntable, filling machine, capping machine, and labeling machine provides consistent action without downtime and reduces operators' injuries. Just one machine can fill all your small bottles.

1. Allowed to connect with any tabletop filling machine.
2. The entire star wheel can be replaced easily for different sizes of bottles.
3. Pneumatic bottle positioning system for precise bottle positioning.

Features

1. Compact Filling Line is able to handle screw caps or other screw caps with a special shape of caps.
2. Compact Filling Line is equipped with a bottle feeding turntable to save manpower and empty bottle feeding time.
3. The speed of the feeding turntable is adjustable according to requirements.
4. Allowed to connect with any kind of tabletop filling machine.
5. Precise detection system, no bottle, no filling, and capping.
6. The entire star wheel can be replaced easily for different sizes of bottles.
7. All settings, including filler and capper, can be set on the touchscreen.
8. No caps alarm stops the running machine if there are no caps under the capping head.
9. Capping height can be adjusted by a numeric hand wheel.
10. Pneumatic bottle positioning system for precise bottle positioning.
11. Compact Filling Line is made of stainless steel and high-grade anodized aluminum.
12. Small batch production is easy and efficient with Compact Filling Line

Specification

- **Filling range**: 5-150ml
- **Capping speed**: 1000/hr (depends on bottle and cap size)
- **Cap type**: caps
- **Bottle size**: Dia : 15~50mm / Height : 30~60mm
- **Voltage**: 110 or 220 VAC

Option Accessories

- Customized star wheel

Categories: Semi Automatic Filling Machine, Filling Machine

AUTOMATIC SMALL BOTTLES FILLING CAPPING LABELING LINE (INCLUDING CAP PLACING MACHINE)

SKU: FC1050

Automatic Small Bottles Filling Capping Labeling Line

Who says that Automatic Small Bottles Filling Capping Labeling Line can only choose large equipment? Neostarpack will dispel the myth that automatic filling production line is only for the large machines.

It is often seen that when customers purchase Automatic Small Bottles Filling Capping Labeling Line for bottles, they find that it is usually only the medium and large filling machines has the scale of automatic production lines. However, many customers have been confined to the limited production space, such as: high-level pharmaceutical preparations, laboratories, initial stage development of new products or medium-sized capacity requirements.

We have designed an automatic small bottles filling capping labeling line that combines the functions of filling, cap placing, capping, labeling and coding into it. It is very suitable for those who do not need high-speed mass production and only need small and medium-sized production capacity to meet the production needs.

This compact automatic small bottles filling capping labeling line has the automatic cap placing machine which is usually equipped for the large automatic filling production line. Moreover, it can also provide the output of up to 550 ~ 900 bottles per hour (It differs from product characteristics and the bottles).

Automatic Small Bottles Filling Capping Labeling Line Leads The Tabletop Filling And Capping Line To The Fully-Automated Level.

Generally, when filling a relatively viscous liquid, the working environment is dirty, or the precision is inaccurate due to the viscosity of the liquid. This small capacity viscous liquid filling and capping line can not only help you improve the cleanliness or being beset by the filling precision. This compact filling capping line is equipped with the cap placing device for fully automated filling machines.

The obvious difference between fully automated compact filling line and tabletop semi-automatic filling line is the active detection for cap placing device. It can save time for cap placing by hand. The extremity of the automatic compact filling line is equipped with a labeling machine, which can help you accurately stick the label and reduce the bubble generation rate when the bottle is labeled.

The Automatic Small Bottles Filling Capping Labeling Line with coder

allows you to print the manufacturing date, serial number and expiration date directly on the label.

Features

1. Suiting for the production of small capacity and viscous liquid products, which can be produced in different types by changing only a few parts.
2. It is suitable for filling products with high viscosity, such as cream, sauce, e-cigarette solution, pharmaceutical drug solution, etc.
3. It is easier to maintain the cleanliness of the work area during production
4. simplifies operation and easy to set up
5. Customized star wheel according to different sizes of the products, and additionally providing the small collecting turntable to choose.
6. Providing the customized automatic cap placing mechanism according to different sizes, shapes and material of the caps
7. Special bottle gripping system helps to position the capping and makes less error.
8. Labeling speed and label position can be adjusted.
9. Machine size is specially designed to meet space-constrained customers
10. Automatic Small Bottles Filling Capping Labeling Line is suitable for the production of liquid products with small capacity specifications
11. Automatic Small Bottles Filling Capping Labeling Line complies with cGMP specifications, the main mechanism adopts stainless steel 304, and customized design can be provided if there are special specifications.
12. It can be produced once the production data is set, and it's easy for the operator to start.
13. The automatic compact filling and capping line satisfies your needs to make production line into automatic production without occupying much pace
14. It has five functions: filling, automatic cap placing, capping, labeling and date or number coding. It can be connected or stand-alone operating.

Specification

- **Filling range**: 10-200ml
- **Filling speed**: 30-150ml/s (The production capacity will vary slightly depends on the viscosity of the liquid and the speed of the characteristics.)
- **Air requirement**: 90PSI/3CFM
- **Cap diameter**: Max. 30 mm (Depending on the size and shape of the cap, the speed of capping varies.)
- **Label size**: (W) 10~100mm / (L) 10~250mm
- **Label reel**: (ID) 75mm (OD) < 300mm

- **Power supply**: 110/220 VAC, single phase
- **Coding speed**: 100-120/min (Matching with the setting of the front-end equipment of the production line)
- **Coding width**: 1-3 lines, 1-14 words per line

Option Accessories

- Tabletop bottle collecting machine
- Customized star wheel module
- Mainframe is made of medical stainless steel
- Tabletop bottle feeding machine
- Different capacity and material storage buckets

Categories: Semi Automatic Filling Machine, Filling Machine

QUICK 3PL
LOGISTICS SIMPLIFIED

INDEX

1
12 Nozzle Overflow Liquid Filler 26

A
Advanced Tabletop Gear Pump Liquid Filler 62
Automated Chemical Products Filling Capping and Labeling Packaging Line 41
Automatic 4-Nozzle Overflow Filler 24
Automatic 6-Nozzle Overflow Filler 23
Automatic 6-Nozzle Piston Filler 15
Automatic 8 Nozzles Gear Pump Liquid Filler 29
Automatic Bottle Filling Machine 33
Automatic Gear Pump Liquid Filler 35
Automatic Overflow Liquid Filler With Safety Gate 21
Automatic Piston Liquid Filling Machine 18
Automatic Small Bottles Filling Capping Labeling Line (Including Cap Placing Machine) 79

B
Big Volume Tabletop Piston Pump Liquid Filling Machine 54

C
Compact Filling Line (Filler/Capper/Labeler) 77

E
Edible Oil Filling Packaging machine 37
Energy Saving Ration Liquid Filling Machine 52

F
Fully Automated Filling-Capping-Labeling Production Line 5

M
Multi-nozzle Over-flow Liquid Filler 28

S
Safety Cover High Speed Piston Pump Filling Machine 8
Semi-auto Tabletop Gear Pump Filling Machine FG1100 (Servo Model) 45
Semi-Automatic Piston Pump Filling Machine 67

T
Tabletop Gear Pump Liquid Filling Machine (tabletop filling machine) 65
Tabletop Overflow Filler 60
Tabletop Peristaltic Pump Liquid Filling Machine 73
Tabletop Piston Filling Machine 58
Tabletop Piston Pump Liquid Filling Machine 56
Twelve Nozzle Automatic Lubricant Oil Filling Machine (Piston Pump) 20

Two-nozzle bottle filler 71

V

Vial Filling Capping Machine Equipment (Piston Pump Liquid Filler & Capper Line) 1