TABLE OF CONTENTS

Bottle unscrambler 2
Bottle Unscrambler 2

BOTTLE UNSCRAMBLER





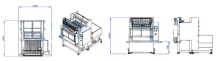

BOTTLE UNSCRAMBLER

SKU: BU5500

Bottle unscrambler BU5500 is easy to operate, understand, and maintain. When using, the operator only needs to put the bottle container into the empty bottle storage tank. The bottle elevator will then feed the bottle to the bottle unscrambler. The bottle unscrambler system will automatically organize all bottles into order with orderliness orientation.

Meanwhile, the distribution track will arrange bottles neatly on the conveyor. When conveying, the bottle stays standing and moves forward in one direction, and the bottle will be sent to the next production process, such as filling machine, labeling machine, counting filling and packaging machine, etc., which can greatly increase the production line efficiency to meets the needs of fully automatic production line.

Bottle unscrambler meets the stability and safety requirements of automatic filling lines

The high-speed bottle unscrambler BU5500 can completely replace manpower to arrange empty bottles on the conveyor. It has a high-capacity bottle feeding and unscrambling function, which can accomplish the automatic feeding of empty bottles and increase the overall efficiency.

The Bottle Unscrambler BU5500 is a linear multi-track design and is unscrambled at a speed of up to 100 bottles per minute. No matter what size and shape of the bottle (round bottle, square bottle, oval or special bottle shape), high speed or low speed production, pharmaceuticals, nutrition supplement, food, cosmetics or chemicals, etc., are all suitable for using automatic bottle unscramblers to help you maximize the efficiency of your production line.

Bottle Unscrambler BU5500 has a built-in storage tank and a bottle unscrambler rotating turntable, which not only saves a lot of space but also can be combined with other packaging equipment into a production line. The system and functions of the machine meet the specifications of the pharmaceutical industry. In addition to the pharmaceutical industry, it can also be used in the food and beverage industry and the cosmetics industry. The bottle unscrambler system

integrates multiple functions and can integrate with all kinds of packaging production lines to provide excellent solutions for you.

Product Advantages

1. Flexible, fast conversion, and low maintenance rate
2. There are multiple distribution tracks to unscramble bottles efficiently
3. Large capacity bottle storage tank
4. Changing production bottles is quick, and does not need tools
5. Save space, and can easily connect with existing equipment
6. Ergonomic design, easy to operate, understand, and maintain

Application & Advantage

Suitable for

Detergent, Syrups, laundry detergent, dishwashing detergent, baby oil, shower gel, shampoo, hand soap, lotion, lotion, drinking water, beverage, juice, sauce, soy sauce, etc.

Suitable Industries

Pharmaceutical industry, biotechnology industry, food and beverage manufacturing, chemical manufacturing, and cosmetics manufacturing.

Applicable bottle

Plastic bottles, round or oval bottles, and other special bottles.



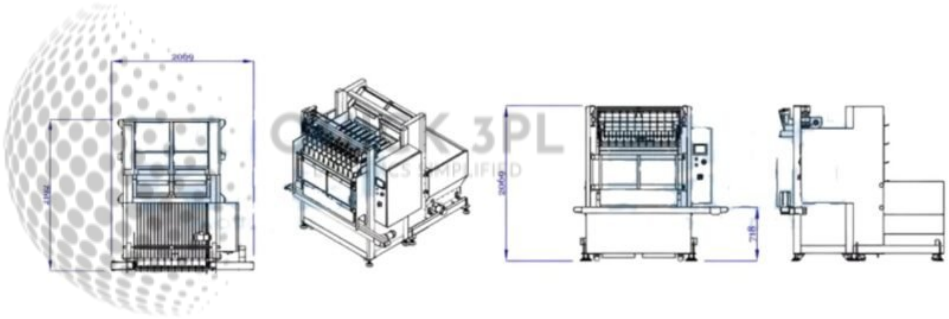

Features

1. Bottle Unscrambler applies to all kinds of bottle containers
2. With multiple speed modes, you can choose low speed or high speed
3. The production speed is up to 100 bottles per minute, which meets the general bottle specifications.
4. There are multiple distribution tracks for conveying and unscrambling bottles quickly
5. Each bottle unscrambler is customized for you to meet your bottle sizes. When changing different bottle sizes of products, you can easily convert by replacing parts
6. Bottle Unscrambler can accurately turn over and organize bottles
7. Bottle Unscrambler has a PLC industrial control system
8. Bottle Unscrambler has a bottle jam detection system. When the bottle container is full on the conveyor belt, it will automatically pause the bottle feeding.
9. Bottle Unscrambler has an out-of-bottle detection system, which will stop automatically when the amount of bottles in the storage

tank is insufficient
10. Bottle Unscrambler has an abnormal detection alarm system to prevent improper operation
11. No need to manually arrange empty bottles on the production line
12. The touchscreen can switch between two languages for convenient operation of the machine
13. Flexible, fast conversion, and low maintenance rate
14. Photoelectric sensor and optimized units for smooth operation
15. Bottle Unscrambler provides a parameter memory function, which can save and load multiple sets of recipes for changing products
16. The sensor of the outfeed bottle jamming detects the smoothness of the bottle conveying.
17. Machine frames and outward are made of 304 stainless steel and high-standard aluminum alloy for aesthetic and durability
18. Bottle Unscrambler has a bottle positioning unit
19. The speed of the unscrambler can be adjusted according to the capacity of the subsequent production line machines
20. The bottle unscrambler can operate independently, and can also be connected to the existing automatic filling and packaging line to increase the overall production capacity.
21. In addition, it can be expanded to integrate the air rinsing machine.
22. Advanced design simplifies maintenance procedures
23. Quickly and regularly place the bottles firmly on the conveyor belt for the subsequent production line machines
24. High performance and space saving, very suitable for pharmaceutical and nutrition supplement products and food processing manufacturers.
25. Customizable mechanism to provide the pharmaceutical industry in compliance with CGMP standards

Specification

- **Automation level**: Fully automatic
- **Speed**：Max:120bottles/per min
- **Applicable bottle**： HDPE, PET, LDPE
- **Applicable bottle style**： Bottle height:100mm~300mm； can be customized
- **Power supply**：110 or 220VAC, 50/60Hz, single phase
- **Machine Dimensions**：(L)2500(W)2500(H)2200mm
- ***Actual product specifications may vary**

Option Accessories

- Static elimination device for bottle unscrambler storage tank
- Bottle air rinsing machine
- Liquid level surface hopper sensor
- Sensor to bring tipped-over bottles back to the storage tank.
- High-level human-machine-interface functions: output report, multi-level authority system, production history record

- The conveyor belt can be lengthened: the length may vary depending on the option selected

Category: Bottle unscrambler

We are here to help you. Contact us at +1 (216) 533-2353 or ovi@quick3pl.com

INDEX

B

Bottle Unscrambler 1